#5110 PANTHER®
ELECTRIC RIDE-ON
FLOOR PREP SYSTEM

INSTRUCTION MANUAL
115 & 230 Volt

Read Manual Before Operating Machine

National
Flooring Equipment, Inc.

National Surface Preparation Equipment
"Surface Preparation Solutions"

9250 Xylon Avenue North • Minneapolis, MN 55445 • U.S.A.
800-245-0267 • 763-535-8206 • Fax 763-535-8255 • Fax 800-648-7124
Web Site: www.nationalequipment.com • E-Mail: info@nationalequipment.com

5110 TABLE OF CONTENTS

- Table of Contents 2-4.1
- Hydraulic 5-6
  - A. Maintaining A Safe Work Environment 5
  - B. Pressure 5-6
  - C. Flammability 6
  - D. Hydraulic Fluid 6
- Rules for Safe Operation 7-10
  - A. Characteristics of a Defensive Operator 8.1
  - B. Grounding 9
  - C. Extension Cords 10
- Safety Instructions 11
- Features/Specifications 12-12.1
- Operating Controls 13-15
  - A. Power Box 13
  - B. Hydraulic Levers 13
  - C. Cylinder Lift 14
  - D. Operating Around the Cord 15
- Operational Tips 16
  - A. Caster 16
  - B. Foot Peg 16
  - C. Seat Safety Switch 16
  - D. Disarm Machine 16
  - E. Disconnect Machine From Power 16
  - F. Leakage 16
  - G. Power Cord 16
  - H. Angle of the Head is Set Steep 16
- How To Plug In Cords 17-18
  - A. Size and Gage of Extension Cords 17
  - B. Cord Hook-Up 17
  - C. Outlet Testing 18
  - D. Cord Length 18
  - E. Circuit Breaker Troubleshooting 18
  - F. Wall Receptacle Choice and Testing 18
- Loading/Unloading 19-20
  - A. Dock Heights 19
  - B. Power-Gate 19
  - C. Ramps 19

5110 TABLE OF CONTENTS

D. Forklift Cups 20
E. Winches.....20
F. Transporting 20
G. Wheel Chocks 20

■ Center of Gravity 20.1

■ Job Site Movement 21-22
A. Taping Wheels.....21
B. Palletizing 21
C. Front Wheel Assembly 21
D. To Move Machine Without Power 22
E. Adjusting Flip Arm Guide in Confined Area's 22

■ Wheel Sizes 23
A. Wheel Size 23

■ Adding Additional Weight 24
A. Front Weight 24
B. Rear Weight 24

■ Cutting Head and Blade 25-26
A. Dialing in the Machine.....25
B. Saving Time with Extra Cutting Heads 25
C. Adjusting Slide Plate and Cutting Head 25
D. Shear Point 25
E. Weight vs. Sharpness 25.1
F. Cutting Head Angle 25.1
G. Steep Cutting Head Angle 25.1
H. Swivel Head 25.1
I. Saving Time with Extra Cutting Heads.....25.1
J. Cutting Head Insertion 26
K. Shank Blade Insertion 26
L. Blade Setting.....26
M. Self Scoring Blades.....26
N. Blade Insertion or Blade Changing 26

■ Blade Application/Set-Up 27-28.1
A. Ceramic Set-Up.....27
B. Wood Set-Up.....27
C. Secondary Backing Carpet Set-Up 27
D. Foam Back Carpet Set-Up 27
E. Double Stick Carpet Set-Up 27
F. VCT Tile Set-Up 27

5110 TABLE OF CONTENTS

G. Rubber Tile Set-Up 27
H. Re-Scraping Set-Up 27
I. Thin Coating Set-Up 28
J. Working Over Concrete 28
K. Working Over Wood 28
L. Working Over Soft Sub-Floor 28
M. Cross Room Ditching 28.1
N. Checker Board Ditching 28.1

■ Blades 29-30.1
A. Types of Blades 29
B. Blade Sharpening 29.1
C. Blade Selection Chart 30-30.1

■ Machine Maintenance 31-38.1
A. Slide Plate Removal 31
B. Lower Cutting Head Support 31
C. Leak Maintenance 31
D. Side and Rear Panels 32
E. Oil Level 32
F. Oil Change Out 32
G. Wheel Motor Change Out 32
H. Hose Change Out 33
I. Foot Peg 33
J. Pump Change Out 33
K. Valve Change Out 33
L. Motor Change Out 33
M. Motor Overload Switch 34
N. Electrical Box 34
O. Hydraulic Cylinder Change Out 34
P. Electrical Cord 34
Q. 110 Volt Wire Diagram 34.1
R. 230 Volt Wire Diagram 34.2
S. Cord Guide 35
T. Wheel Changing 35
U. Changing Filter 35
V. Caster Maintenance 36
W. Back Up Beeper and Light 37
X. Seat Replacement 38
Y. Seat Safety Switch 38
Z. Debris Deflector Mounting Instructions 38.1

5110 TABLE OF CONTENTS

- Complete Parts List 39-41.2
- Part Numbers and Diagrams.....42-55
  - A. Hood & External Parts.....42
  - B. Electrical Box Parts 43
  - C. Switch & Back-Up Beeper Parts 44
  - D. Instruction Tube & Cord Parts 45
  - E. Motor Parts 46
  - F. Pump Parts 47
  - G. Frame & Support Parts 48
  - H. Wheel Parts.....49
  - I. Single Spool & Hose Parts 50
  - J. Double Spool & Hose Parts.....51
  - K. Slide Plate & Cylinder Parts 52
  - L. Caster & Foot Peg Parts 53
  - M. Filter Parts.....54
  - N. Weights. 55
- Labels 56-57
- Accessories.....58-60
- Material Safety Data 61-66
- Guarantee.....67
- Return Sheet 68
- Blade Order Form 69-70

HYDRAULIC SAFE OPERATION

MAINTAINING A SAFE WORK ENVIRONMENT

Establishing a safe working environment in and around your hydraulic equipment is just common sense. The easiest and most effective way to avoid problems is to make sure associates understand their equipment, know how to operate it safely and recognize the danger it represents if handled carelessly. A few things you must be aware of include:

1. **PRESSURE:** Hydraulic fluid under pressure is dangerous and can cause serious injury.
2. **FLAMMABILITY:** When ignited, some hydraulic fluids can explode and/or cause fires.
3. **MECHANICAL:** Hydraulic fluid creates movement, which causes parts of your equipment to move or rotate. Always be aware of what you are doing.
4. **MOISTURE:** Never operate in wet or high moisture conditions without a proper GFI grounded switch. Make sure all electrical fittings, switches, cords plus stain reliefs are in good condition. Always unplug when not in use and when doing any service work.
5. **ELECTRICAL:** Disconnect power before servicing. Unplug cord so it can't be started. Faulty wiring can also be an electrical hazard. A regular preventive maintenance program should always include a wiring check.
6. **TEMPERATURE:** Because this machine operates at a relatively low pressure, overheating is not common. If surface of tank becomes too hot to touch by hand (above 130º), shut off machine and allow to cool off.

PRESSURE

Our system runs at or below 1,200 psi. Never look for a leak when unit is under pressure. Using your hand could cause serious injury. A few common ways to encounter hydraulic fluid under pressure include:

1. **PINHOLE:** Fluid under pressure can cause serious injury. It can be almost invisible escaping from a pinhole, and it can pierce the skin into the body. Do not touch a pressurized hydraulic hose assembly with any part of your body. If fluid punctures the skin, even if no pain is felt, a serious emergency exists. Obtain medical assistance immediately. Failure to do so can result in loss of the injured part or death.
2. **LEAK:** Keep fittings and hoses tight. Only check and service when not under pressure. Leaking hydraulic fluid is not only unsightly, it's hazardous. In addition to making workplace floors slippery and dangerous, leaks also contaminate the environment. Before cleaning an oil spill, always check EPA, state and local regulations.

LEAK AT THREAD END/SEAT

Problem: Coupling leaks at thread or seat. This may be caused by any of the following:

a. Missing or damaged O-rings.
b. Damaged threads or seat angle.
c. Thread alignment.
d. Incompatible thread ends or seat angles.
e. Over or undertorquing.

Solution: Remove the connection and inspect.

1. Certain couplings require the use of an O-ring. If it is missing, replace it. If an O-ring is used, check for damage caused by installation or possible material breakdown from heat or fluid incompatibility. Alternative O-ring materials may be required. Replace if necessary.

PRESSURE (continued)

2. Check the threads and/or seat angle for damage that may have occurred prior to or during installation. Any ding or burr may be a potential leak path. Replace if necessary.
3. If the coupling was misaligned during installation, threads may have been damaged. Replace and carefully install.
4. Overtorquing of a threaded connection can stretch and damage threads and mating seat angles. Overtorquing can also damage the staking area of the nut. Undertorquing does not allow proper sealing.

⚠ CAUTION: Never check for leaks over hose or hydraulic connections. Instead, use a piece of cardboard to locate a pressurized leak. For drips (low pressure leaks), use a rag to clean the area and determine where the leak originates.

⚠ CAUTION: Never touch a pressurized hose assembly. Shut down the hydraulic system before checking hose temperature.

3. **BURST:** Whether due to improper selection or damage, a ruptured hose can cause injury. If it bursts, a worker can be burned, cut, injected or may slip and fall.
4. **COUPLING BLOW-OFF:** If the assembly is not properly made or installed, the coupling could come off and hit or spray a worker, possibly resulting in serious injury. Never operate machine without guards.

FLAMMABILITY

With the exception of those comprised primarily of water, all hydraulic fluid is flammable when exposed to the proper conditions (including many “fire-resistant” hydraulic fluids).

Leaking pressurized hydraulic fluids may develop a mist or fine spray that can flash or explode upon contact with a cause of ignition. These explosions can be very severe and could result in serious injury or death.

Precautions should be taken to eliminate all ignition sources from contact with escaping fluids, sprays or mists resulting from hydraulic failures. Sources of ignition could be electrical discharges (sparks), open flames, extremely high temperatures, sparks caused by metal-to-metal contact, etc.

HYDRAULIC FLUID

Only use Texaco Rando 46 Hydraulic Oil or Compatible Fluid Like IS032. Non-compatible fluids could cause damage to unit or serious injury.

⚠ WARNING: When using electric tools, always follow basic safety precautions to reduce the risk of electric shock and personal injury.

RULES FOR SAFE OPERATION

READ AND SAVE ALL INSTRUCTIONS FOR FUTURE USE. Before use, be sure everyone operating this equipment reads and understands this manual as well as any labels packaged with or attached to the machine and components and view the instruction video. Extra copies of the manual and video are available.

1. **KNOW YOUR EQUIPMENT:** Read this manual and view instruction video carefully to learn equipment applications and limitations as well as potential hazards associated with this type of equipment.

> ⚠ **WARNING:** Disarm machine when not in use. Remove Cutting Head or lower Cutting Head to the floor. When exiting machine (getting off machine), remove lower Cutting Head to the floor. When transporting machine around job site, remove Cutting Head. Failure to follow these instructions could cause severe bodily injury.

2. **DISARM MACHINE:** Remove cutting head or drop cutting head to the floor when machine is not in use.
3. **DO NOT "SLIDE HILL" MACHINE:** See Page 19.
4. **GROUND YOUR TOOL:** See Grounding (Page 9).
5. **AVOID DANGEROUS ENVIRONMENTS:** Do not use in rain, damp or wet locations, or in the presence of explosive atmospheres (gaseous fumes, dust or flammable materials). Remove materials or debris that may be ignited by sparks.
6. **KEEP WORK AREA CLEAN AND WELL LIT:** Cluttered, dark work areas invite accidents.
7. **DRESS PROPERLY:** Do not wear loose clothing. These may be caught in moving parts. Keep hands and gloves away from moving parts.
8. **USE SAFETY EQUIPMENT:** Everyone in the work area should wear safety goggles or glasses complying with current safety standards. Wear hearing protection during extended use and a dust mask for dusty operations. Hard hats, face shields, safety shoes, etc. should be worn when specified or necessary.
9. **KEEP BYSTANDERS AWAY:** Children and bystanders should be kept at a safe distance from the work area to avoid distracting the operator and contacting the tool or extension cord. Operator should be aware of who is around them and their proximity.
10. **PROTECT OTHERS IN THE WORK AREA:** Provide barriers or shields as needed to protect others from debris and machine operation.
11. **USE PROPER ACCESSORIES:** Using accessories that are not recommended may be hazardous. Be sure accessories are properly installed and maintained. Do not delete a guard or other safety device when installing an accessory, attachment or servicing.
12. **CHECK FOR DAMAGED PARTS:** Inspect guards and other parts before use. Check for misalignment, binding of moving parts, improper mounting, broken parts and any other conditions that may affect operation. If abnormal noise or vibration occurs, turn the tool off immediately and have the problem corrected before further use. Do not use damaged equipment. Tag damaged tools "DO NOT USE" until repaired. A guard or other damaged parts should be properly repaired or replaced. For all repairs, insist on only identical National replacement parts.
13. **REMOVE ALL ADJUSTING KEYS AND WRENCHES:** Make a habit of checking that the adjusting keys, wrenches, etc. are removed from the tool before turning it on.

RULES FOR SAFE OPERATION

14. **GUARD AGAINST ELECTRIC SHOCK:** Prevent body contact with grounded surfaces such as pipes, radiators, ranges and refrigerators. When scoring or making cuts, always check the work area for hidden wires or pipes. Use a Ground Fault Circuit Interrupter (GFCI) to reduce shock hazards.

15. **AVOID ACCIDENTAL STARTING:** Be sure equipment is turned off before plugging it in. Do not use if the power switch does not turn the machine on and off.

16. **DO NOT FORCE EQUIPMENT:** Equipment will perform best at the rate for which it was designed. Excessive force only causes operator fatigue, increased wear and reduced control.

17. **KEEP HANDS AND FEET AWAY FROM ALL CUTTING EDGES AND MOVING PARTS.**

18. **WEAR GLOVES WHEN CHANGING BLADES.**

19. **DO NOT ABUSE CORD:** Never unplug by yanking the cord from the outlet. Pull plug rather than cord to reduce the risk of damage. Keep the cord away from heat, oil, sharp objects, cutting edges and moving parts.

20. **DO NOT OVERREACH. MAINTAIN CONTROL:** Stay properly seated. Keep proper footing and balance at all times. Maintain a firm grip.

21. **STAY ALERT:** Watch what you are doing, and use common sense. Do not use when you are tired, distracted or under the influence of drugs, alcohol or any medication causing decreased control.

22. **STARTING MACHINE:** On/off switch must be in off position before connecting to power source.

23. **UNPLUG EQUIPMENT:** When it is not in use, unplug tool before changing blades, accessories or performing recommended maintenance or when not in use.

24. **MAINTAIN EQUIPMENT CAREFULLY:** Keep control levers dry, clean and free from oil and grease. Keep cutting edges sharp and clean. Follow instructions for lubricating and changing accessories. Periodically inspect all wiring and extension cords for damage. Have damaged parts repaired or replaced.

25. **STORE IDLE EQUIPMENT:** When not in use, store in a dry, secured place. Keep away from children. Remove blade or keep blade lowered to the floor (disarm machine).

26. **MAINTAIN LABELS AND NAMEPLATES:** These carry important information. If unreadable or missing, contact National for a free replacement.

27. **MACHINE IS HEAVY, DO NOT DROP:** Counter weights are heavy. Take caution when removing or reassembling. Take caution when moving or transporting.

28. **IF THE SUPPLY CORD IS DAMAGED:** It must be replaced by the manufacturer or its service agent or a similarly qualified person in order to avoid a hazard.

⚠ **WARNING:** Exposure to dust may cause respiratory ailments. Use approved NIOSH or OSHA respirators, safety glasses or face shields, gloves and protective clothing. Provide adequate ventilation to eliminate dust, or to maintain dust level below the Threshold Limit Value for nuisance dust as classified by OSHA.

RULES FOR SAFE OPERATION

CHARACTERISTICS OF A DEFENSIVE OPERATOR

- Education
- Alert
- Skills
- Judgment
- Common Sense
- Recognizes the Hazards
- Understands the Defense
- Acts Correctly

A GOOD OPERATOR IS A "DEFENSIVE" OPERATOR

QUALITIES

Education: Learns about the machine and the environment.

Alert: Stays alert at all times…never lets guard down.

Skills: Only performs duties he/she are qualified to do. Always tries to improve.

Judgment: Plays it safe. Doesn't take chances.

Common Sense: Does the right thing without having to be told. Applies knowledge.

Recognizes the Hazards: Maintains alertness. Anticipates danger.

Understands the Defense: Knows that safety isn't an accident…it's a thinking person's choice.

Acts Correctly: Does not cave in to pure pressure. Performs correctly when supervised or not.

GROUNDING

⚠ WARNING: Improperly connecting the grounding wire can result in the risk of electric shock. Check with a qualified electrician if you are in doubt as to whether the outlet is properly grounded. Do not modify the plug provided with the tool. Never remove the grounding prong from the plug. Do not use the tool if the cord or plug is damaged. If the plug will not fit the outlet, have a proper outlet installed by a qualified electrician.

⚠ WARNING: Electrical cords can be hazardous. Misuse can result in fire or death by electrical shock. Read carefully and follow all directions.

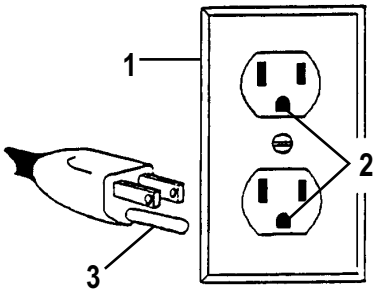

Figure A

1. Cover of grounded outlet box
2. Outlet ground
3. Grounding prong

GROUNDED TOOLS: TOOLS WITH THREE PRONG PLUGS

Tools marked “Grounding Required” have a three wire cord and three prong grounding plug. The plug must be connected to a properly grounded outlet (See Figure A). If the tool should electrically malfunction or break down, grounding provides a low resistance path to carry electricity away from the user, reducing the risk of electric shock.

The grounding prong in the plug is connected through the green wire inside the cord to the grounding system in the tool. The green wire in the cord must be the only wire connected to the tool's grounding system and must never be attached to an electrically “live” terminal.

Your tool must be plugged into an appropriate outlet, properly installed and grounded in accordance with all codes and ordinances. The plug and outlet should look like those in Figure A.

EXTENSION CORDS

⚠ WARNING: Electrical cords can be hazardous. Misuse can result in fire or death by electrical shock. Read carefully and follow all directions.

⚠ WARNING: If cords are damaged they must be replaced by the manufacturer or its service agent or a similarly qualified person in order to avoid a hazard.

Grounded tools require a three wire extension cord. As the distance from the supply outlet increases, you must use a heavier gauge extension cord. Using extension cords with inadequately sized wire causes a serious drop in voltage, resulting in loss of power and possible equipment damage or circuit breaker failure.

The smaller the gauge number of the wire, the greater the capacity of the cord. For example, a 14 gauge cord can carry a higher current than a 16 gauge cord. When using more than one extension cord to make up the total length, be sure each cord contains at least the minimum wire size required. If you are using one extension cord, add the nameplate amperes and use the sum to determine the required minimum wire size.

GUIDELINES FOR USING EXTENSION CORDS

- Two twelve gauge extension cords are required to run the machine.
- If more than 100 feet is required for cord length (50 feet for each power cord and 50 feet for each extension cord), for 110 volt we recommend the use of 10 gauge extension cords or heavier. Extension cord specifications for EU; cord must have nominal cross-sectional area of 1.5 mm^2 and be polyvinyl chloride H05VV-F (227 IEC 53) or polychloroprene H05RN-F (245 IEC 57) or higher.
- If you are using an extension cord outdoors, make sure it is marked with the suffix “W-A” (“W” in Canada) to indicate that it is acceptable for outdoor use.
- Be sure your extension cords are properly wired and in good electrical condition. Always replace a damaged extension cord or have it repaired by a qualified person before using it.
- Protect your extension cords from sharp objects, excessive heat and damp or wet areas.
- Keep away from water. Do not use if wet.
- Inspect thoroughly before each use. DO NOT USE IF DAMAGED.
- Make sure equipment is OFF before connecting cord outlet.
- FULLY INSERT plug into outlet.
- Do not remove, bend or modify any metal prongs or pins of cord.
- Do not use excessive force to make connections.
- Do not connect a three prong plug to a two-hole cord.
- Avoid overheating. Uncoil cord and do not cover it with any material.
- Do not run machine over cords.
- Do not walk on cords.
- Do not drive or place objects over cord.

READ AND SAVE ALL INSTRUCTIONS FOR FUTURE REFERENCE.

5110 SAFETY INSTRUCTIONS

Read and understand operators instruction manual and instructional video before operating this equipment.

WARNING: Know and understand before operation. Failure to do so could cause damage to equipment or bodily injury.

- Only qualified, trained personnel should operate this unit.
- Loose or damaged parts should be replaced immediately. Failure to do so could cause equipment damage or serious injury.
- Switches, cord, plug and receptacle should be inspected. (Disconnect power before repairs to prevent electrical shock). Unplug when not in use. Do not use if defective. Switches should return to off when released.
- Be aware of the proximity of the power cord when machine is being operated.
- Power control box, motor and switches should be completely enclosed at all times with no exposed wiring.
- Disconnect power from unit before servicing or changing blades. Failure to do so can cause electrical shock.
- Only use National components. Failure to do so could cause damage or serious injury.
- Always be aware of support personnel and their proximity when in operation. Block off work area.
- Support personnel should never stand next to machine, in front of or behind machine while machine is running. Failure to do so could cause serious bodily injury or death.
- Manual should be kept with machine in supplied holder for access by operator at all times.
- Always wear eye protection when running machine.
- Never defeat switches or guards.
- Remove blade when machine is not in use and/or lower cutting head to floor. Failure to do so could cause serious bodily injury.
- Wear gloves when changing blades.

WARNING: Failure to follow any of the above instructions could cause damage to machine, damage to property or serious bodily injury or death.

5110 FEATURES/SPECIFICATIONS

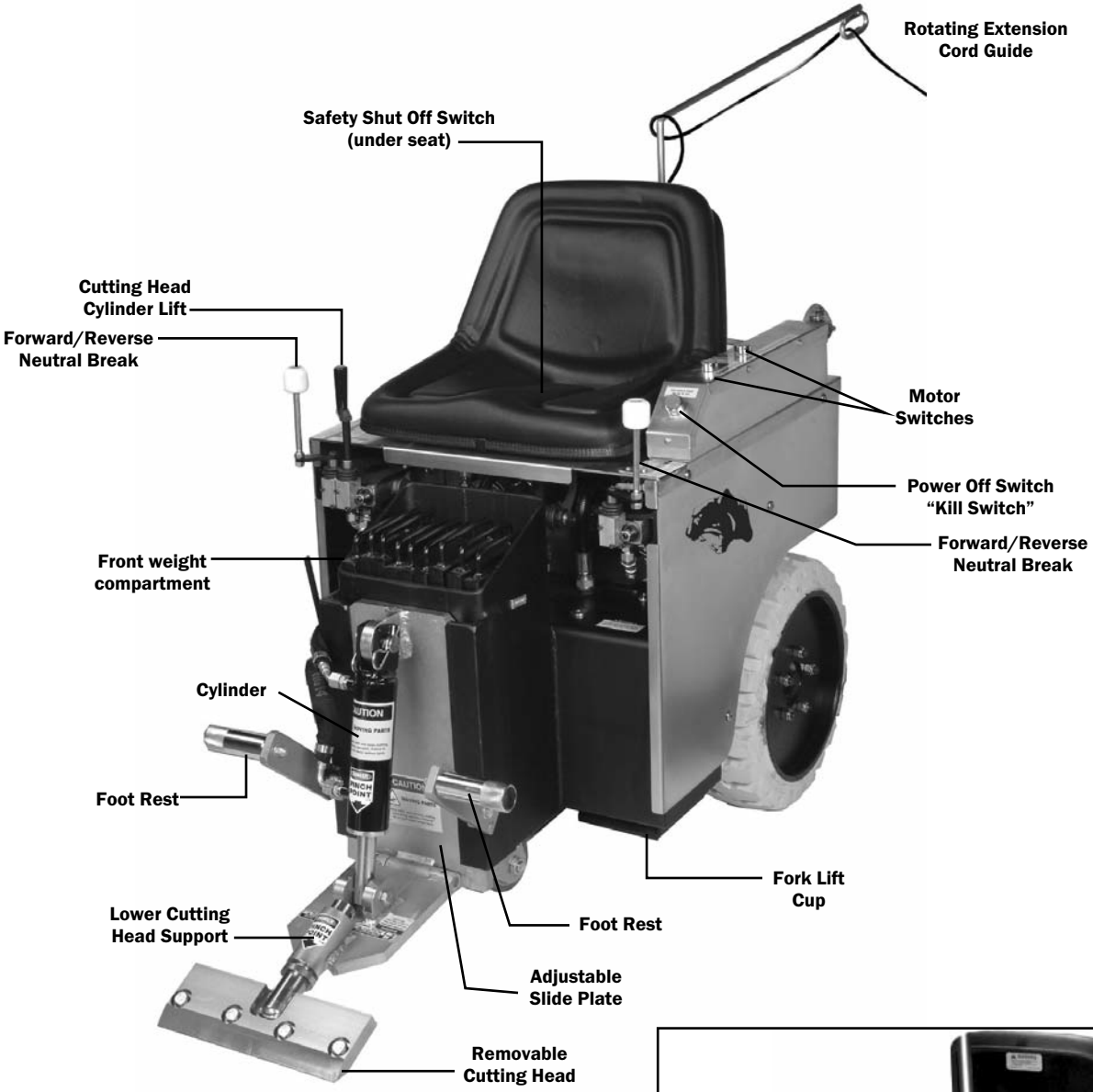

SPECIFICATIONS
Width: 24-1/2 inches
Height: 27 inches
Height w/Seat: 39-1/2
Length without Jaw: 50 inches
Empty Weight: 880 pounds
Weight (With Added Front weight): 1186 pounds
Speed: Up to 113 feet per minute

	115 Volt	230 Volt
MOTOR INFORMATION		
RPM	1725	1425
Hz	60	50/60
Volts	115	230
HP	1.5	1.1 KW
Amps-Full Load	13.5	6.5
	Continuous Duty	

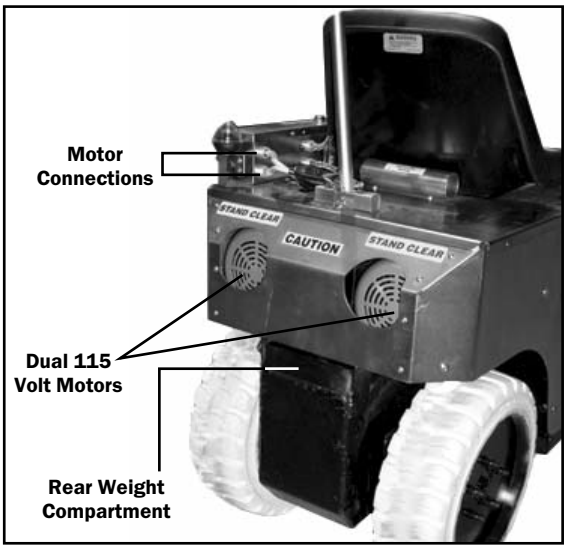

VIBRATION/SOUND DATA

VIBRATION DATA:

Axis	Stationary	Moving
X	>0.1	0.5
Y	0.3	0.3
Z	0.4	0.1
Vector Sum	>0.1	0.6

Whole Body
Vibration Levels in m/s^2

Axis	Left	Right
X	0.5	1.4
Y	0.3	1.4
Z	0.6	0.5
Vector Sum	0.9	2.0

Hand/Arm
Vibration Levels in m/s^2

SOUND DATA:

	dBA
Stationary	77.0
Moving	73.0

Operator Sound Level
dBA ref. 20 Pa

5110 OPERATING CONTROLS

POWER BOX (FIGURE A)

Note: It is necessary to be seated before starting machine to keep machine running. The two green switches are the starting switches. Press one green switch at a time. This will start the motors individually. The red switch is the shut off switch, also referred to as the "kill switch". See cord hook up for plugging in the motor cords.

HYDRAULIC LEVERS (FIGURE B)

The hydraulic levers steer the machine. They are feathered spool valves. For smooth even movement, move levers slowly. Fast movement on control levers will result in jerky, uneven movement.

- Move levers slowly.
- Both levers forward ⬆⬆ move the machine forward.
- Both levers backward ⬇⬇ move the machine backward.
- The left lever forward and the right lever backward ⬆⬇ turn the machine quickly to the right.
- The left lever backward and the right lever forward ⬇⬆ turn the machine quickly to the left.
- Only the left lever forward ⬆, turns the machine slowly to the right.
- Only the left lever backwards ⬇, turns the machine slowly to the left.

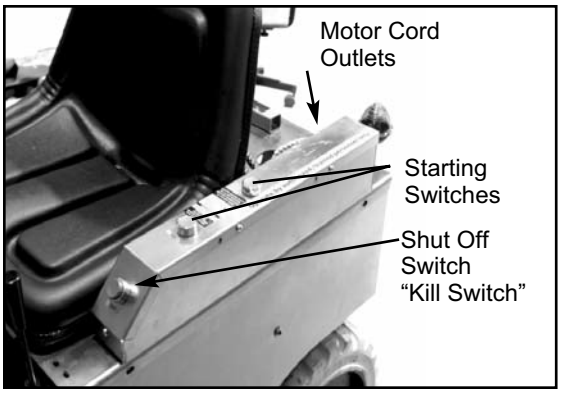

Figure A

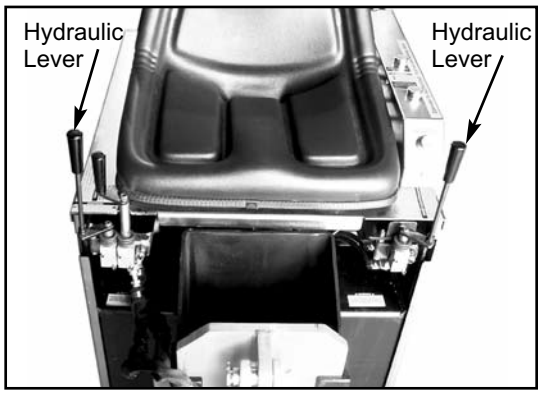

Figure B

5110 OPERATING CONTROLS

CYLINDER LIFT (FIGURE A)

The cylinder lift lever raises and lowers the cylinder and cutting head. After setting slide plate to proper height, use the cylinder lift lever to set blade to proper cutting angle. Pull back ⬇ on the cylinder lift lever to raise the cutting head. Push the cylinder lift lever forward ⬆ to lower the cutting head. Continuing to push the cylinder lift lever forward and it will adjust the angle of the cutting head. This will also jack up the machine (See Figure B). This will need to be done when doing maintenance on the machine (ie: wheel changing, front caster maintenance etc).

⚠ **WARNING:** Disarm machine by removing the cutting head or dropping the cutting head to the floor when the machine is not in use.

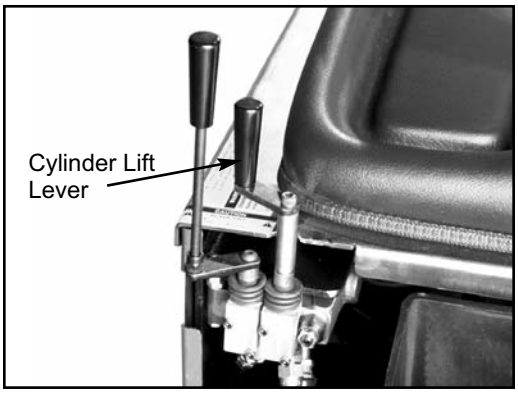

Figure A

Figure B

5110 OPERATING CONTROLS

⚠ **CAUTION:** Do not run over cord. Doing so could cause damage to equipment or severe bodily injury.

OPERATING AROUND THE CORD (FIGURE A)

The extension cord should be properly fed through the clip on the end of the flip arm cord guide. Loop cord once. See the Cord Hook Up in the manual. The flip arm cord guide is designed to keep track of the location of the electrical cord, especially when backing up and turning.

- Keep cord to side and slightly forward.
- Always work away from the cord.
- When backing up or making a sharp turn, check the location of the cord.
- Flip arm moves from side to side to help to keep electrical cords from being ran over (See Figure B).
- Adjust the flip arm cord guide in confined areas. Center position is achieved by moving cord guide arm to the 12 o'clock position and securing in place with pin (See Figure C). This is used when going through doorways or hallways. Hold cord straight out the back of the machine.

⚠ **WARNING:** Disarm machine by removing the cutting head or dropping the cutting head to the floor when the machine is not in use.

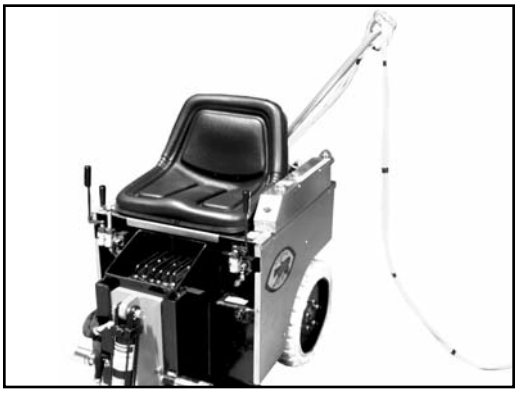

Figure A

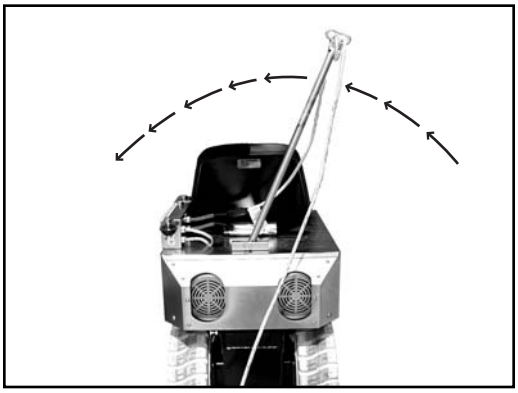

Figure B

Figure C

5110 OPERATIONAL TIPS

CASTER

Keep clean and free of debris, make sure it can move freely.

FOOT PEG

Keep feet resting and secured on foot pegs when operating machine.

SEAT SAFETY SWITCH

The seat safety switch is mounted under the center portion of the seat. This switch is designed as an emergency shut off. If you are not sitting down on the seat, the machine will shut off. Warning: Do not alter switches.

DISARM MACHINE

Remove blade or drop cutting head to the floor when machine is not in use.

DISCONNECT MACHINE FROM POWER

Never change cutting head or service blade while machine is running.

LEAKAGE

Keep fittings and hoses tight. If a leak is noticeable, retighten fitting. If leakage persists, remove the connection and inspect.

POWER CORD

Be aware of where the power cord is. Do not run over the cord. If an electrical cord is damaged it must be replaced by the manufacturer or its service agent or a similarly qualified person in order to avoid a hazard.

ANGLE OF THE HEAD IS SET STEEP

When raising the front of the machine to a steep angle, the bottom of the slide plate should be raised so it is higher or even with the bottom of the guide channels.

HOW TO PLUG IN CORDS

⚠ **WARNING:** Electrical cords can be hazardous. Misuse can result in fire and/or death by electrical shock. Read carefully and follow all directions. Never defeat safety features or bypass the electrical control box. Doing so could cause property damage and/or serious injury.

SIZE & GAGE OF EXTENSION CORD

Grounded tools require a three wire extension cord. As the distance from the supply outlet increases, you must use a heavier gauge extension cord. Using extension cords with inadequately sized wire causes a serious drop in voltage, resulting in loss of power and possible equipment damage or circuit breaker failure.

The smaller the gauge number of the wire, the greater the capacity of the cord. For example, a 14 gauge cord can carry a higher current than a 16 gauge cord. When using more than one extension cord to make up the total length, be sure each cord contains at least the minimum wire size required. If you are using one extension cord, add the nameplate amperes and use the sum to determine the required minimum wire size.

- Two twelve gauge extension cords are required to run the machine.
- If more than 100 feet is required for cord length (50 feet for each power cord and 50 feet for each extension cord), for 110 volt we recommend the use of 10 gauge extension cords or heavier. Extension cord specifications for EU; cord must have nominal cross-sectional area of 1.5 mm^2 and be polyvinyl chloride H05VV-F (227 IEC 53) or polychloroprene H05RN-F (245 IEC 57) or higher.

CORD HOOK-UP

Machine is supplied with a fifty-foot twin cord and two single fifty-foot 12 gauge extension cords.

1. Connect both male motor cord plugs (from the back of the machine) into the female plugs on the back of the power control box (See Figure A). Each plug controls a motor and they can be plugged in either order. Make sure cords are tightly plugged together.

2. From the female end of the twin cord, go in 3 feet and make a loop in the cord. Insert the loop into the clip on the end of the flip-arm/cord guide. The loop in the cord secures the cord from slipping or pulling out of the cord guide.

   A. For 110 volt; connect both female plugs into the male plugs on the side of the power control box (See Figure B). Also, see “Outlet Testing” before plugging cords into outlet. Make sure cords are tightly plugged together.

   B. For 230 Volt; connect female plug into the male plug on the side of the power control box (See Figure C). Also, see “Outlet Testing” before plugging cords into outlet. Make sure cords are tightly plugged together.

Figure A

Figure B

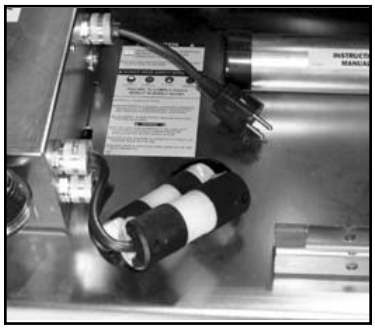

Figure C

HOW TO PLUG IN CORDS

OUTLET TESTING

If cords are plugged into the same outlet, start one motor at a time. Never start both motors at the same time. If you can't run both motors from the same outlet, plug the twin cord into the supplied extension cords and test in two separate circuits. Choose outlets as far apart as is practical. The idea is to find outlets on different circuits.

CORD LENGTH

For 110 volt, if the twin cord plugged into the supplied fifty foot (12 gauge) extension cords is not enough length, convert to 10 gauge cords. The longer the cord length that is needed, lowering the gauge of the cords will help to lower the amperage loss due to the cord length. Extension cord specifications for EU; cord must have nominal cross-sectional area of 1.5 mm^2 and be polyvinyl chloride H05VV-F (227 IEC 53) or polychloroprene H05RN-F (245 IEC 57) or higher.

CIRCUIT BREAKER TROUBLESHOOTING

Use a transformer when circuit breakers have low voltage (See optional #5110-500 Buck & Boost). The Buck & Boost increases the line voltage at a receptacle. A job-site with bad power, the use of a Buck & Boost may solve the problem. It also works great when extension cords exceed 100 feet in length. Example: A receptacle registering 90 volts, the Buck & Boost will increase it to 118 volts.

⚠ **WARNING:** Only use the Buck & Boost when the voltage has been determined at the wall receptacle. Failure to do so could cause severe damage to equipment or possible injury.

WALL RECEPTACLE TESTING

Determine the supply line with a volt meter (See optional #5110-501 Voltage Meter). Plug voltage meter into a wall outlet to determine the voltage at that receptacle. If the voltage is too low, plug twin cord into two separate circuits. Choose outlets as far apart as is practical. The idea is to find outlets on different circuits or convert to a transformer.

⚠ **WARNING:** If the supply cord is damaged, it must be replaced by the manufacturer or its service agent or a similarly qualified person in order to avoid a hazard.

5110 LOADING/UNLOADING

- Always remove blade and cutting head when machine is being moved or transported
- Cutting head and slide plate can be removed to make the machine more compact.
- NEVER leave machine unattended on an incline.
- Removing added weights help to make the machine easier and safer to move in and out of a vehicle.

⚠ **WARNING:** Machine has a swivel front caster. **Never** side hill (See Figure A). The machine on a incline without power, the front caster will cause machine to swing to the lowest point. If it is necessary to run machine on an incline, run machine on cutting head. Place at least a 8" cutting head in machine. To keep from damaging floor, clamp a piece of carpet into cutting head to slide on the floor. This will give positive contact with the floor when power is disengaged from the wheels.

DOCK HEIGHTS

It is best to load or unload the machine from a level/equal dock height (a van from a van dock height, a truck/semi from a regular dock height).

POWER-GATE

A power-gate can be used when the dock height is not available. Make certain the machine is secure so it does not roll off the power-gate. To better secure machine, raise machine on to the lower cutting head support raising machine off the caster.

RAMPS

To be safe, the ramp needs to be very long to accommodate the machine being loaded/unloaded. Remove added weight. Make sure ramp is secured. Do not have at a steep incline. The use of a power winch or hand come-a-long is much safer. For a van, the ramp should be 12 to 18 feet in length depending on the depth of the incline. For truck height taller than a van, longer ramps will be needed. See OSHA guidelines. It is not recommended to drive the machine, connected with power, on a ramp. Make sure ramp is secure and has good contact before using. Failure to do so could cause ramp to fall away from the vehicle.

Note: See correct and safe operating angels and center of gravity on page 20.1.

CAUTION: DO NOT "SIDEHILL"

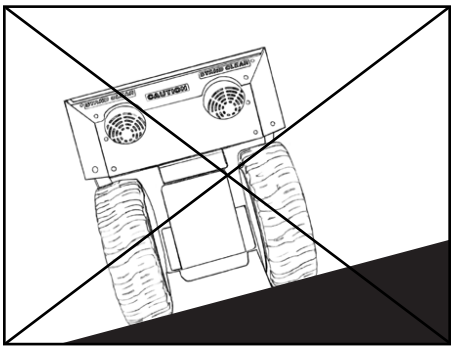

Figure A

5110 LOADING/UNLOADING

FORKLIFT CUPS

There are two forklift cups mounted under the front of the machine (See Figure A). Slide fork lift forks through forklift cups. Slide forks all the way back to touch the rear tire (See Figure B). Before lifting machine, secure machine to fork lift with heavy 3000 lb. or heavier rope or chain. Tilt forks back to lift machine (See Figure C).

> ⚠ **WARNING:** Never tilt machine forward. It could slide off fork lift forks.

WINCHES

Winches should be used for safety when loading or unloading with ramps. 2000 lb. winch minimum.

TRANSPORTING

Secure machine down with ratchet straps when transporting the machine. To keep machine from rolling, hydraulic levers should **not** be locked in the forward or backward position. Hydraulic levers should be straight up in the "neutral" position. This helps to lock drive wheels. Lift machine off swivel caster onto lower cutting head support for better stabilization. Proper securing straps need to be rated at least twice the weight of the machine.

WHEEL CHOCKS

Wheel chocks will help to secure the machine but DO NOT use wheel chocks alone to secure the machine.

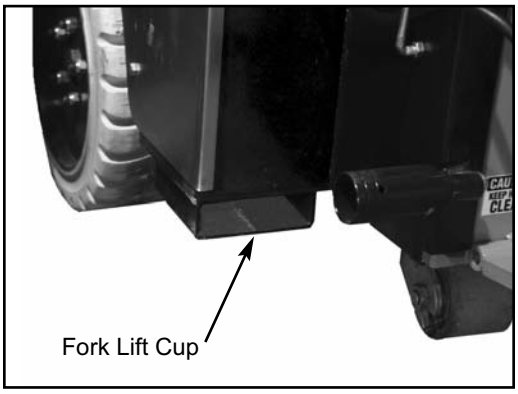

Figure A

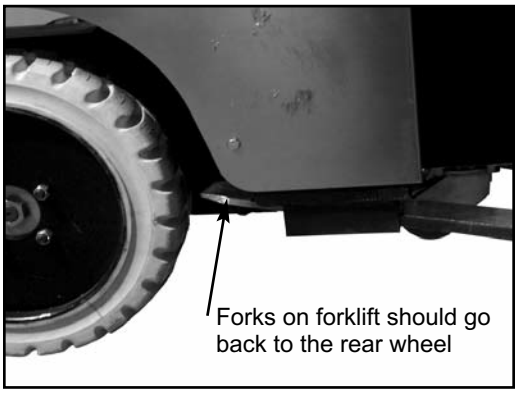

Figure B

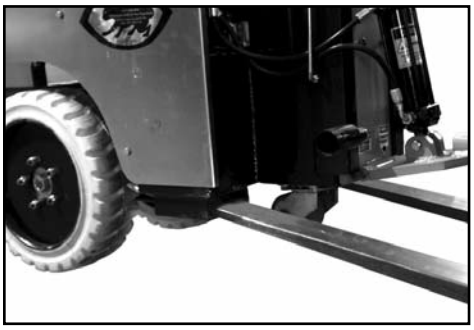

Figure C

5110 CENTER OF GRAVITY

Be aware of your surroundings and machines operating angels. When changing from a low slide plate to a high slide plate setting or a low cutting head angle to a high cutting head angle, the operating “attitude” of the machine changes. When a floor surface is not level (ramps, inclines, large amounts of debris which would lift the drive wheel of the machine, etc.), the center of gravity changes. Too much of an angle could make the machine unsafe (a cause for tip-over). **Do Not** run the machine in unsafe environments.

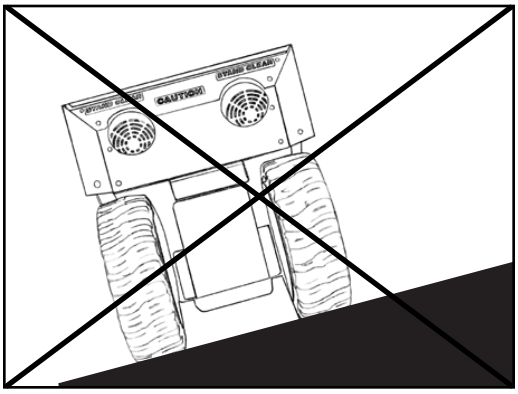

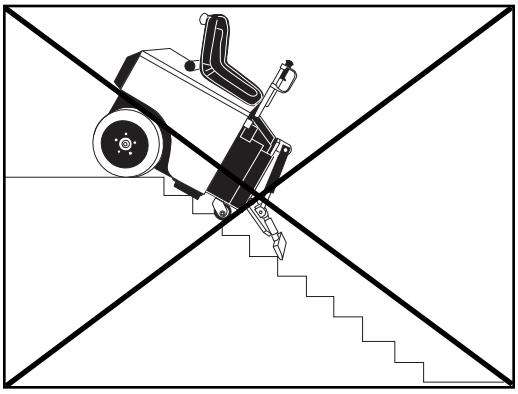

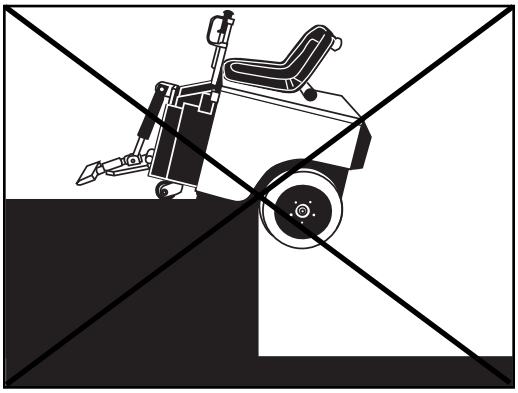

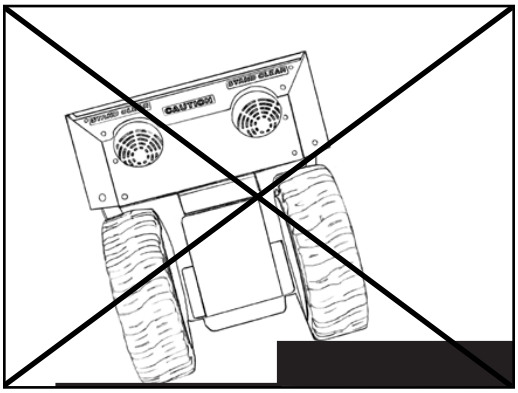

5110 JOB SITE MOVEMENT

- Always remove blade and cutting head when machine is being moved or transported
- Cutting head and slide plate can be removed to make the machine more compact.
- NEVER leave machine unattended on an incline.
- Removing added weights help to make the machine easier to move.

TAPING WHEELS

Taping the wheels with a wide like masking tape helps to prevent damage and dirt to floors during move-in and move-out.

PALLETIZING

Only use a solid platform pallet. If a solid platform pallet is not available, place a piece of ¾" plywood on top of a pallet. Using a forklift with the forks inserted in the forklift cups, place machine on pallet. Use ratchet straps to secure machine to pallet.

FRONT WHEEL ASSEMBLY (FIGURE A)

The Front Wheel Assembly is an optional attachment (#5110-100) that is very helpful when moving the machine around on a job-site or loading the machine that is not on a pallet. It allows machine stability and safe transportation over any surface. It is easy and quick to attach or detach. Raise slide plate so the bottom of the slide plate is higher or even with the bottom of the guide channels. Raise cylinder, insert Front Wheel Assembly into cutting head. Secure with securing pin.

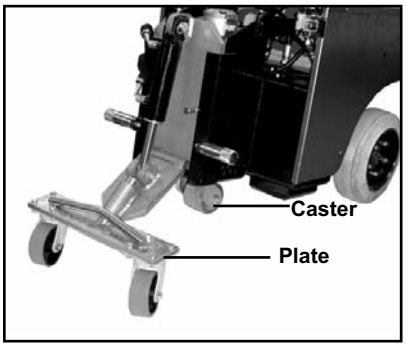

Figure A

Note: Make sure the plate is parallel with the floor so the caster swivels freely.

⚠ **WARNING:** Protect others in work area. Provide barriers or shields as needed to protect others from debris and machine operation. Operator should be aware of who is around them and their proximity.

5110 JOB SITE MOVEMENT

TO MOVE MACHINE WITHOUT POWER (PUSHING MACHINE)

Forward: To move the machine forward, levers need to be pushed forward. To lock levers in place, connect a bungee-strap from each lever (pushing levers forward), pulling straps down to and connecting to the front plate (See Figure A).

Backward: To move machine backward, levers need to be pulled backwards. To lock levers in place, connect a bungee-strap from each lever (pushing levers backward), Pulling straps to the back of the machine and connecting behind the seat or the rear of the machine (See Figure B).

⚠ **WARNING:** Always remove straps before starting motors. Failure to do so will make machine move and may cause property damage and/or bodily injury.

ADJUSTING FLIP ARM CORD GUIDE IN CONFINED AREAS

In a hallway or confined area, center the flip arm cord guide to the twelve o'clock position so it is standing straight up (See Figure C). Secure with securing pin

FORWARD

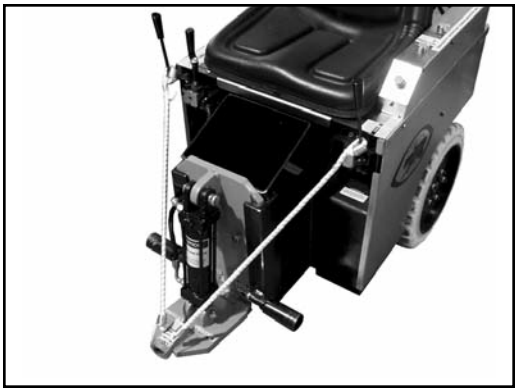

Figure A

BACKWARD

Figure B

Figure C

5110 WHEEL SIZES

WHEEL SIZE(FIGURE A)

The larger of the wheels is more commonly used. The larger wheel is faster in speed (up to 113 feet per minute). In most cases the larger wheel will work on all job types of application and heavy debris build-up (vct, ceramic etc.). It also works best for slippery/slimy residue, ie. double stick.

The smaller of the wheels works best for very small, congested areas where extra steering control is needed. The smaller wheel slows down the speed (82 feet per minute) which makes the machine more powerful and uses lower electricity supply. Some difficult materials come up better with slower removal speed with the smaller wheels. The smaller wheel also allows more weight to run on the machine.

To change wheels, see Wheel Changing on page 35.

⚠ **WARNING:** When doing maintenance or changing a wheel, make sure machine is supported properly or serious injury could occur.

Figure A

5110 ADDING ADDITIONAL WEIGHT

FRONT WEIGHT

Adding weight to the front of the machine is necessary for difficult to remove goods such as, VCT, VAT, ceramic, thin-set or wood. Machine includes nine 37 lb. front weights with handles. Set front weights in front weight compartment (See Figure A).

REAR WEIGHT

Adding rear weight creates more traction. The heavier the machine, usually the better it will work, especially on hard to remove goods.

Machine includes one 100 lb. rear weight. Slide back weight in provided pocket under rear cowl (See Figure B). Secure locking bolt with either a 9/16 or 3/4 wrench (size varies).

⚠ **CAUTION:** A heavy machine cannot be used on wood subfloors or raised panel computer floors, (keep machine light). Always check floor for proper strength to support the weight of the machine.

⚠ **CAUTION:** Remove added weight from machine before transporting or loading machine. Failure to do so could cause loss of control of machine, damage to machine or property and bodily injury.

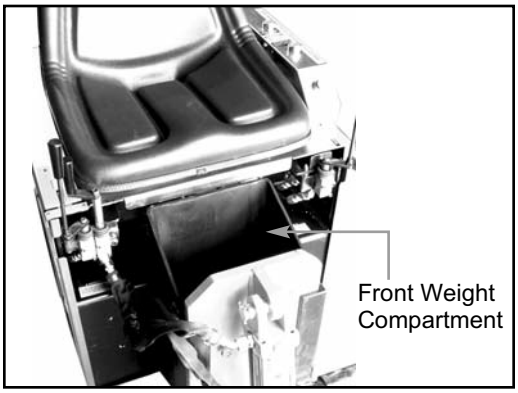

Figure A

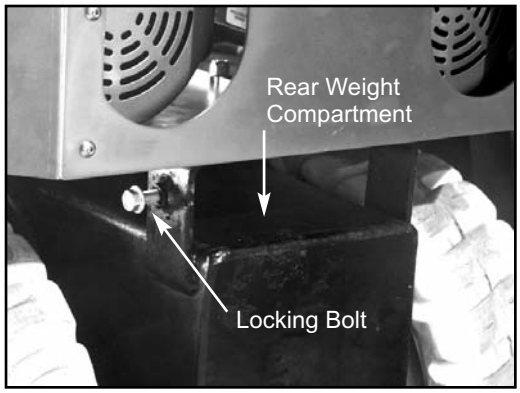

Figure B

5110 CUTTING HEAD & BLADES

DIALING IN THE MACHINE

Dialing in the machine is matching the correct cutting head, blade size, blade angle and added weight to the machine to make the material removal as easy as possible. For every material being removed, there is an optimum blade width, thickness, sharpness, angle and bevel (bevel up or bevel down).

SAVING TIME WITH EXTRA CUTTING HEADS

The machine is supplied with one cutting head. Having additional cutting heads will save time on the job. Insert blades into the extra cutting heads before starting a job. When the blade is dull, instead of taking the time to replace it or sharpen it on the job, take out the cutting head and replace it with another. Or when a different type or size of blade is needed, you have them ready to use.

ADJUSTING SLIDE PLATE AND CUTTING HEAD (FIGURE A & B)

Caution: Pinch point. When adjusting slide plate, keep feet and hands out from underneath the cutting head and slide plate. Failure to do so could cause severe bodily injury. When bolts are removed from the slide plate, the cutting head and the slide plate will drop down to the floor.

- Loosen the two bolts on the front of the slide plate with a 3/4" wrench (See Figure C).
- Slide plate up or down to achieve the desired height of the cutting head.
- Firmly retighten both bolts.

SHEAR POINT

The shear point is the point where material to be removed will cut cleanly from the floor. If the blade is too wide or too dull, the shear point is lost.

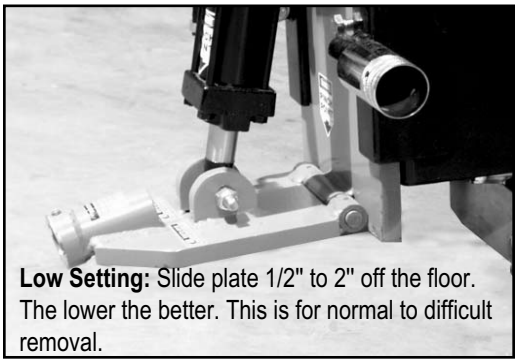

Low Setting: Slide plate 1/2" to 2" off the floor. The lower the better. This is for normal to difficult removal.

Figure A

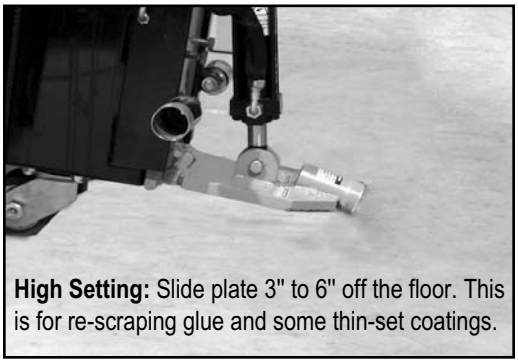

High Setting: Slide plate 3" to 6" off the floor. This is for re-scraping glue and some thin-set coatings.

Figure B

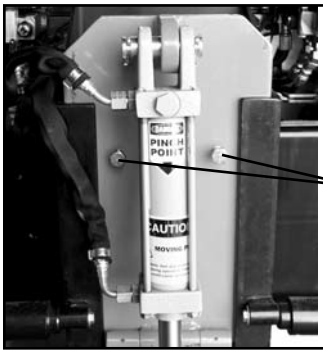

Figure C

⚠ **CAUTION:** Blades are sharp, use extreme caution.

⚠ **CAUTION:** Never change cutting head or service blades while machine is running.

⚠ **WARNING:** Disarm machine when machine is not in use. Remove the cutting head or drop cutting head to the floor. Failure to do so could cause severe bodily injury.

5110 CUTTING HEAD & BLADES

WEIGHT VS. SHARPNESS

The most common way to compensate for a dull blade is to add more weight and raise the blade angle (see re-scrape setting). Weight allows dull blades to be used to a point. Weight also causes blades to dull and break easier. Blades of any thickness tend to catch cracks and expansion joints and will bend or break the blade if set at a high angle. For best results, run a small ditching blade at a low angle to identify as many cracks and joints as possible. If blades are breaking, you are misunderstanding the conditions.

CUTTING HEAD ANGLE

Set the cutting head angle to where the material comes up the easiest.

STEEP CUTTING HEAD ANGLE

A steep angle is only used for re-scraping. The slide plate has to be raised so the bottom of the slide plate is higher or even with the bottom of the guide channels (See Figure A). Not raising the slide plate when operating the machine at a steep angle will cause the machine to jump and buck. It does not give the operator a clear vision of the cutting head and it raises the machine to operate at a unsafe operating height (See Figure B). Failure to raise the slide plate could cause machine damage and/or bodily injury.

SWIVEL HEAD

The swivel head keeps the blade in contact with the floor even when the floor is uneven. When using a flat blade, by swiveling the head over 180° allows another sharp edge on the blade without having to replace the blade.

SAVING TIME WITH EXTRA CUTTING HEADS

The machine is supplied with one cutting head. Having additional cutting heads will save time on the job. Insert blades into the extra cutting heads before starting a job. When the blade is dull, instead of taking the time to replace it or sharpen it on the job, take out the cutting head and replace it with another. Or, when a different type or size of blade is needed, you have them ready to use.

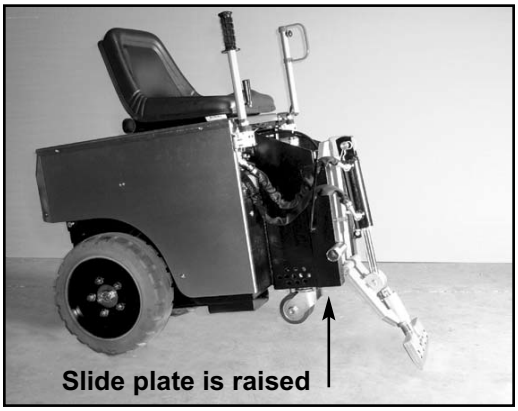

Figure A

Correct slide plate setting with a steep cutting head angle.

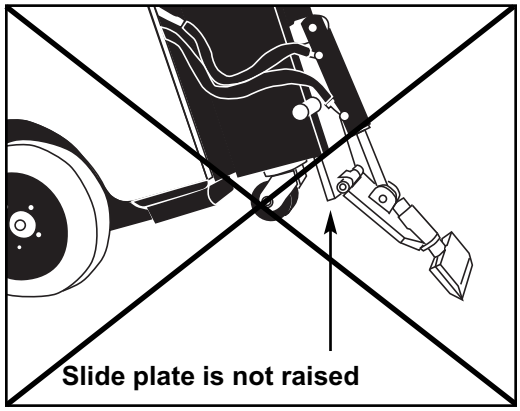

Figure B

Incorrect slide plate setting with a steep cutting head angle.

5110 CUTTING HEAD & BLADES

CUTTING HEAD INSERTION

Insert desired cutting head into cutting head holder. Secure with cutting head clip.

SHANK BLADE INSERTION

Shank blades do not require a cutting head. Insert desired shank blade into cutting head holder. Secure with cutting head clip.

BLADE SETTING

- Dull blades greatly reduce cutting ability. Re-sharpen or replace as needed.
- Proper blade size and placement, depending on material and sub-floor type, affects performance.
- The harder a job comes up, for best results, use a smaller blade.
- Start with a narrow blade, then increase blade size to optimize cutting pass. Narrower blades work easier than wider blades and usually clean the floor better. Wider is not always better or faster.
- Normally bevel on blade is up for concrete. Bevel down for wood and shoe blades for soft sub-floors.

BEVEL UP CONCRETE FLOORS

BEVEL DOWN OR SHOE BLADES WOOD FLOORS

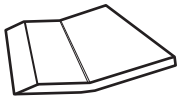

SHOE BLADE SOFT SUB-FLOORS

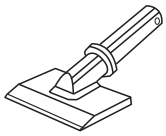

- KEEP BLADES SHARP.
- Dull blades greatly affect the performance of the machine and reduce cutting ability, resharpen or replace as needed.
- Keep your work area clean and clear of debris.
- After you have removed a portion of material, remove it out of the way. This will give the machine maximum performance and help to keep the work area safe.
- Always wear gloves when handling blades.

SELF SCORING BLADES

Instead of pre-scoring a job, the self scoring blades automatically do the scoring.

BLADE INSERTION OR BLADE CHANGING

Using a 3/4" socket wrench, loosen bolts on cutting head. Quantity of bolts will very depending upon cutting head size. Insert blade into the cutting head to back of notch (See Figure A). Tighten firmly.

Note: A cordless 3/8" drive impact wrench will speed up this process especially out on the job.

- Sharp blades are imperative for good performance. • Always wear gloves when handling blades.

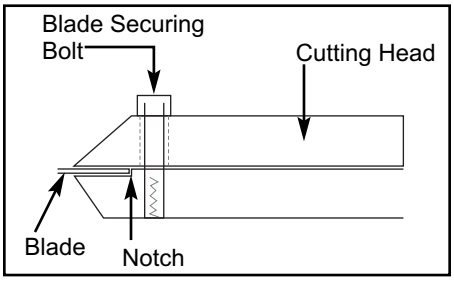

Figure A

CAUTION: Blades are sharp, use extreme caution.

CAUTION: Never change cutting head or service blades while machine is running.

WARNING: Disarm machine when machine is not in use. Remove the cutting head or drop cutting head to the floor. Failure to do so could cause severe bodily injury.

5110 BLADE APPLICATION/SET-UP

CERAMIC SET-UP

Slide plate should be set low, 1/2" to 2" off the floor. Use a Shank Blade or a Shank Blade with a carbide tip.

WOOD SET-UP

Slide plate should be set low, 1/2" to 2" off the floor. Use Shank Blades, Shank Blades with carbide tips or a 6"or 8" Cutting Head with Shoe Blades, Bent Shoe Blades or Heavy Duty Blades. **Note:** run machine 45° to the grain of the wood.

SECONDARY BACKING CARPET SET-UP

Slide plate should be set low, 1/2" to 2" off the floor. Use a Cutting head from 10" to 27" with Heavy Duty Blades or a Cutting Head from 10" to 14" with a Self-Scoring Blade.

FOAM BACK CARPET SET-UP

Slide plate should be set low, 1/2" to 2" off the floor. Use Cutting Heads from 10" to 14" with Self-Scoring Blades. If it is not stuck tight, use a Cutting Head from 14" to 27" with a Standard Blade.

DOUBLE STICK CARPET SET-UP

It is best to test to see which is the easiest way to remove double stick. Start with a Cutting Head from 10" to 14" with Self-Scoring Blades. If Self Scoring blades do not work, score thru the carpet (See Figure A) the width of the blade (Standard Blade) and scrape up. In some cases, carpet might pull off the pad and then scrape up the pad separately.

VCT TILE SET-UP

Slide plate should be set low, 1/2" to 2" off the floor. If goods come up easily, try a razor blade with a Cutting Head from 8" to 14". If goods come up harder, use a Cutting Head from 8" to 27" with a Premium High Tempered Blade to match cutting head size. If goods remove easily, a Tile Box #7074 can be used. A tile box also works for wind rowing and assists for a fast clean-up and collection of tile debris for quick removal.

RUBBER TILE SET-UP

Slide plate should be set low, 1/2" to 2" off the floor. Use a Cutting Head from 6" to 14" with self-scoring blades.

RE-SCRAPING SET-UP

Slide plate should be set high, 3" to 8" off the floor. Use a Cutting Head from 8" to 14" with Scraper Blades to match cutting head size. A 15" scrapper blade would use a 14" Cutting Head. Razor Blades are faster but a Cutting Head from 8" to 14" can be used with a Standard Blade. Sharp blades are imperative for re-scraping.

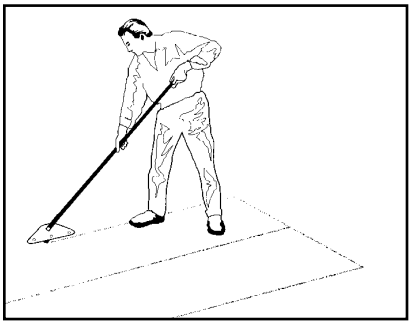

Figure A

⚠ **CAUTION:** Blades are sharp, use extreme caution.

⚠ **CAUTION:** Never change cutting head or service blades while machine is running.

⚠ **WARNING:** Disarm machine when machine is not in use. Remove the cutting head or drop cutting head to the floor. Failure to do so could cause severe bodily injury.

5110 BLADE APPLICATION/SET-UP

THIN COATING SET-UP

Slide plate should be set high, 3" to 6" off the floor. Use a Cutting Head from 8" to 14" with Razor Blades to match cutting head size.

WORKING OVER CONCRETE

Blade should be bevel up when working over concrete. Pretty much anything over concrete works. Try different set-ups to see which works best. If goods come up difficult, slide plate should be at a low setting, 1/2" to 2" off the floor. Use a smaller size blade. If goods come up easily, slide plate can be at a high setting and a wider blade can be used.

WORKING OVER WOOD

A heavy machine cannot be used on wood subfloors or raised panel computer floors. Keep machine light, remove all weights. A weighted machine could break through the floor. Slide plate should be set low, 1/2" to 2" off the floor. Blades should be as flat of an angle as possible. Use a "shoe blade", Extra Heavy Duty Blade (these blades have a bend to them) or a regular blade, bevel up. When using a regular blade, bending up the corners of the blade will help from the blade digging into the floor. Sometimes a shank blade or a shank blade with a carbide tip will work. The trick on wood floors is to run the blade flat.

WORKING OVER SOFT SUB-FLOOR

Slide plate should be set low, 1/2" to 2" off the floor. Blades should be as flat of an angle as possible. Use a "shoe blade", Extra Heavy Duty Blade (these blades have a bend to them) or a regular blade, bevel up. When using a regular blade, bending up the corners of the blade will help from the blade digging into the floor. Sometimes a shank blade or a shank blade with a carbide tip will work.

⚠ **CAUTION:** Blades are sharp, use extreme caution.

⚠ **CAUTION:** Never change cutting head or service blades while machine is running.

⚠ **WARNING:** Disarm machine when machine is not in use. Remove the cutting head or drop cutting head to the floor. Failure to do so could cause severe bodily injury.

Note: When removing carpet from over VCT Tile and the tile needs to be saved, run the machine at a 45° angle over the tile. This should help to save the tile.

5110 BLADE APPLICATION/SET-UP

DITCHING

CROSS ROOM DITCHING

When removing hard to remove ceramic, Vct or vat, cross-room ditching will help to make the removal easier. Using a blade 2" to 6" in width, make ditches 1' to 2' apart in the same direction the machine will be removing the goods (See Figure A). This "relieves" the pressure holding the tiles together. If ditching helps and the goods are coming up easy, try using a wider blade to ditch with.

CHECKER BOARD DITCHING

To make carpet removal and debris cleanup easier, checker board ditching is very helpful. Using as wide of a self-scoring blade as possible, make ditches 4' to 6' apart crossways from the way the machine will be removing the goods (See Figure B). Running the machine crossways from the ditches will make smaller pieces of debris to be hauled away. Instead of large gummy rolls of carpet, there are small squares that can be rolled, palletized, put on a dolly or folded with the sticky side in. This makes removing the debris easier and reduces the amount of debris.

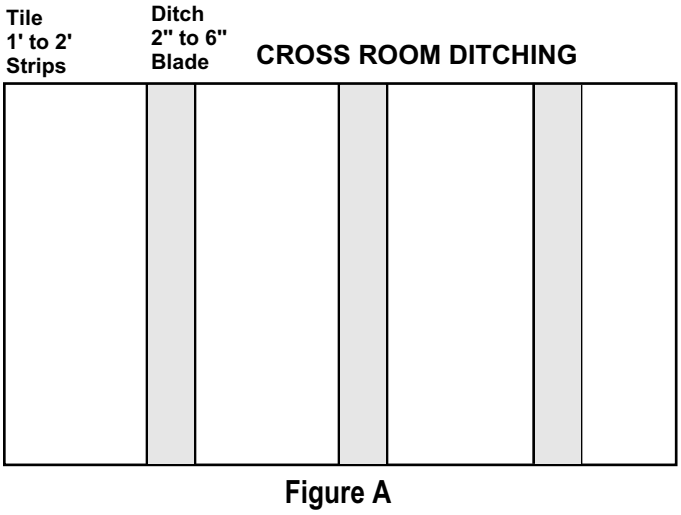

Figure A

Run the machine the same direction that the ditches are made

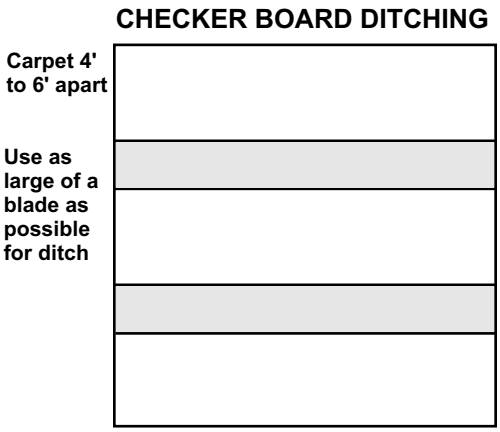

Figure B

Run the machine crossways from the directions that the ditches are made

5110 BLADES

TYPES OF BLADES

PREMIUM HIGH TEMPERED BLADES

Works on all glued down carpets, VCT, VAT, rubber tile, cork, re-scraping adhesive, elastomeric coatings. Great for floor accumulations. Ultra high quality spring steel is extra hard for long blade life between sharpening.

HEAVY DUTY BLADES

Works on VCT, VAT, wood, tile, rubber epoxy, thin-set, elastomeric coatings, scraping, thin set and glued ceramic. A heavy-duty blade that still gives a little flex. Blade sharpening process helps these blades to stay sharper longer.

EXTRA HEAVY DUTY BLADES

Works on VCT, VAT, wood, tile, thin ceramic, re-scraping thin set, all carpets, cork, elastomeric coatings re-scraping rubber and urethane coatings. Extremely hard, high abrasion alloy for though tear-up situations. Holds the edge extremely well.

SHOE BLADES/ANGLE SHANK BLADES

Works well for ceramic, wood, thick epoxy, thin-set, mud set, decorative concrete topping and much more. Blade is mounted at an angle to achieve the optimum shear point for optimum performance. Made from an ultra tough alloy, which is put through special processing to achieve an unbelievable edge holding ability.

SHOE BLADES/ANGLE SHANK BLADES WITH CARBIDE TIPS

Works well for ceramic, wood, thick epoxy and elastomeric coatings. Carbide tipped for holding a sharp edge for long periods. Nothing else performs like carbide when no other blade will work. Blade is mounted at an angle to achieve the optimum shear point for optimum performance. Made from an ultra tough alloy, which is put through special processing to achieve an unbelievable edge holding ability.

SELF SCORING BLADES

Works on attached cushion, Unitary or secondary backing, vinyl back, soft to medium PVC, linoleum, carpet tiles, soft cork, Enhancer and Unibond hot melts. Instead of pre-scoring a job, the self scoring blades have "wings" that automatically do the scoring. Blade hardening process makes these blades tough and long lasting.

RAZOR/SCRAPER BLADES

Used for re-scraping thin epoxies, thin mil coatings like; urethane paint, poured elastomeric coatings up to 60 mil, hard to remove adhesive and much more.

TILE BOX

Assists for a fast cleanup and collection of tile debris for quick removal. Can be used to remove easy to remove tile. Extremely high abrasion alloy for a long lasting edge. Edge can be re-sharpened.

5110 BLADES

BLADE SHARPENING

Dull blades greatly reduce cutting ability. Re-sharpen or replace as needed. In use, blades develop a back-bevel (See Figure A). When re-sharpening, blade will not be truly sharp until all back-bevel is gone.

Note: Thinner blades are easier to sharpen, but they also break easier.

- Always wear gloves and safety glasses.
- Grind blade using a 4" diameter disk with 120 or finer grit. Be careful not to catch disk on edge or corner of blade.
- Pass grinder back and forth along blade edge being careful to hold grinder at proper angle of blade. Grind until sharp.
- Using a good quality fine tooth hand file, use same procedure as above.
- Blades are sharp. Use extreme caution.
- Have plenty of sharp blades on each job so on-the-job blade sharpening is eliminated.
- It is best to resharpen dull blades on proper bench or belt grinder in the shop, so the blades are ready for the next job.

SELF SCORING BLADE SHARPENING

It is important to keep the “wings” on a self scoring blade sharp (See Figure B). Use a file on the “wing” edge. Sharpen the flat part of the blade, the same way as described above.

CARBIDE TIPPED BLADE SHARPENING

To sharpen carbide tipped blades, a wheel to grind carbide is necessary, ie: green wheel or diamond wheel.

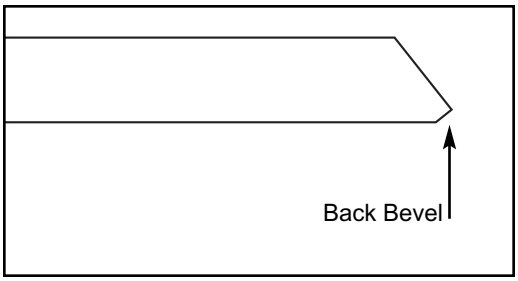

Figure A

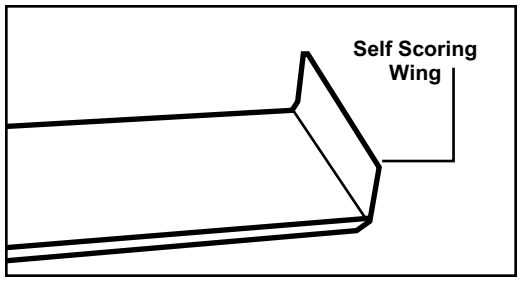

Figure B

⚠ **CAUTION:** Blades are sharp, use extreme caution.

⚠ **CAUTION:** Never change cutting head or service blades while machine is running.

⚠ **WARNING:** Disarm machine when machine is not in use. Remove the cutting head or drop cutting head to the floor. Failure to do so could cause severe bodily injury.

5110 BLADES

Part #	Description	Application	Thickness
#135	5" x 16" Blade	Rubber back carpet on wood or concrete floors, excellent for cleanup and longer durability	.062
#147	4" x 6" Blade	Tile or linoleum on concrete floors	.062
#148	5" x 6" Blade	Tile or linoleum on wood floors	.062
#363-2	3/4" x 8" Razor/Scraper Blade (50/pkg)	Razor sharp, super hard for scraping thin epoxies, thin mil coatings like; urethane paint, poured elastomeric coatings up to 60 mil, hard to remove adhesive and much more.	.032
#368-8	7/8" x 8" Razor/Scraper Blade (50/pkg)		.045
#368-12	7/8" x 12" Razor/Scraper Blade (50/pkg)		.045
#368-15	7/8" x 15" Razor/Scraper Blade (50/pkg)		.045
#6258-BU	3" x 12" Self Scoring Blade - Bevel Up	Works on attached cushion, Unitary or secondary backing, vinyl backing, soft to medium Pvc, linoleum, carpet tiles, soft cork, Enhancer and Unibond hot melts.	.062
#6259-BU	3" x 14" Self Scoring Blade - Bevel Up		.062
#6260-BD	3" x 6" Heavy Duty Ditching		.094
#6276-BU	3" x 10" Self Scoring Blade	Same application as the .062 blade. The 45° angle, self scoring wings for easy sharpening. The thickness greatly reduces breakage, especially on heavily weighted machines.	.094
#6277-BU	3" x 12" Self Scoring Blade		.094
#6278-BU	3" x 14" Self Scoring Blade		.094
#6281	3" x 8" Heavy Duty Blade	A heavy duty blade that still gives a little flex. Made with Nationals proven blade hardening process, these blades will stay sharper longer with better overall performance than any other blade on the market. Works on Vct, Vat, wood, tile, rubber epoxy, thin-set, elastomeric coatings, scraping thin-set, glued ceramic.	.094
#6282	3" x 14" Heavy Duty Blade		.094
#6283	3" x 27" Heavy Duty Blade		.094
#6284	3" x 12" Heavy Duty Blade		.094
#6285	3" x 6" Heavy Duty Blade		.094
#6286	3" x 10" Heavy Duty Blade		.094
#6290	3" x 6" Extra Heavy Duty Blade	Extremely hard, high abrasion alloy for tough tear-up situations. Vct, Vat, wood, tile, thin ceramic, re-scraping thin-set, all carpets, cork, elastomeric coatings, re-scraping rubber and urethane coatings. Holds the edge extremely well.	.187
#6291	3" x 8" Extra Heavy Duty Blade		.187
#6292	3" x 12" Extra Heavy Duty Blade		.187
#6293	3" x 14" Extra Heavy Duty Blade		.187
#6294	3" x 27" Extra Heavy Duty Blade		.187
#7050-200	3" x 6" Premium High Tempered Blade	Ultra high quality spring steel is extra hard for long blade life between sharpening. Works on all glue down carpets, Vct, Vat, rubber tile, cork, re-scraping adhesive, elastomeric coatings. Great for floor accumulations.	.062
#7050-201	3" x 8" Premium High Tempered Blade		.062
#7050-202	3" x 10" Premium High Tempered Blade		.062
#7050-203	3" x 12" Premium High Tempered Blade		.062
#7050-204	3" x 14" Premium High Tempered Blade		.062
#7050-205	3" x 27" Premium High Tempered Blade		.062
#7070-2	4" x 2" Straight Shank Blades	Works well for ceramic and thick epoxy. Made from an ultra tough alloy, which is put through special processing to give these blades unbelievable edge holding ability for ceramic, epoxy, thin-set, mud-set, decorative concrete toppings and much more.	.500
#7070-3	4" x 3" Straight Shank Blades		.500
#7070-4	4" x 4" Straight Shank Blades		.500
#7070-6	4" x 6" Straight Shank Blades		.500
#7071-2	4" x 2" Angle Shank Blades	Works well for ceramic and thick epoxy. The same application as the #7070 Blades except mounted at an angle to achieve the optimum shear point for optimum performance.	.500
#7071-3	4" x 3" Angle Shank Blades		.500
#7071-4	4" x 4" Angle Shank Blades		.500
#7071-6	4" x 6" Angle Shank Blades		.500
#7072-2	4" x 2" Straight Shank w/Carbide Tip	Works well for ceramic and thick epoxy. The same application as the #7070, includes the angle like the #7071 and carbide tipped like the #7072. Works well on elastomeric coatings.	.500
#7072-3	4" x 3" Straight Shank w/Carbide Tip		.500
#7072-4	4" x 4" Straight Shank w/Carbide Tip		.500
#7072-6	4" x 6"Straight Shank w/Carbide Tip		.500

5110 BLADES

Part #	Description	Application	Thickness
#7075-8	2" x 8" Tapered Cutting Head Shank	The long taper works great on tough wood floors (glued & nailed). The long length allows the blade to easily slide under tough material. Works well on most ceramics and VCT.	.300
#7075-11	2" x 11" Tapered Cutting Head Shank		.300
#7077-8	3.5" x 8" Tapered Cutting Head Shank		.300
#7077-11	3.5" x 11" Tapered Cutting Head Shank		.300
#7076-8	2" x 8" Tapered w/Carbide Tip	The long taper works great on tough wood floors (glued & nailed). The long length allows the blade to easily slide under tough material. Works well on most ceramics and VCT. Carbide tipped for holding a sharp edge for long periods.	.300
#7076-11	2" x 11" Tapered w/Carbide Tip		.300
#7078-8	3.5" x 8" Tapered w/Carbide Tip		.300
#7078-11	3.5" x 11" Tapered w/Carbide Tip		.300
#7079-2	2" x 6" Ultra HD Ceramic Epoxy Blade	Designed for ceramic removal & thin-set re-scraping. 1/2" of carbide which is twice the carbide of the #7072 & #7073 series blades. The extra carbide allows for maximum re-sharpening. Strong enough to work on machines up to 3500 lbs.	.500
#7079-4	4" x 6" Ultra HD Ceramic Epoxy Blade		.500
#7079-6	6" x 6" Ultra HD Ceramic Epoxy Blade		.500
#7074	5" x 27" Tile Box with 6" High Box	Extremely high abrasion alloy for a long lasting edge. Box assists for a fast clean-up and collection of tile debris for quick removal.	.187
#7081	3" x 10" Increased Angle Blade	Mainly used for VCT but can be used on most other applications. Supplies more of an angle when needed. Prevents machine from jumping off material.	.062
#7083	3" x 8" Increased Angle Blade		.062

SLIDE PLATE

To Remove Slide Plate

1. Disconnect machine from power.
2. Remove slide plate pin. Remove cutting head bolt. Remove cylinder from slide plate. Remove slide plate.

OR

1. Disconnect machine from power.
2. Unplug hydraulic lines from cylinder. A small amount of oil leak out of lines. Cap lines or bleed into a container. Wipe up spillage immediately.
3. With lines removed, loosen slide plate securing bolts. Hold slide plate at the top of the cylinder. Take Caution: slide plate will drop to the floor when slide plate securing bolts are disengaged. Keep hands and feet out from underneath slide plate.
4. Remove slide plate, cylinder and lower cutting head support.

Take Caution: slide plate will drop to the floor when slide plate securing bolts are disengaged. Keep hands and feet out from underneath slide plate, failure to do so could cause severe bodily injury.

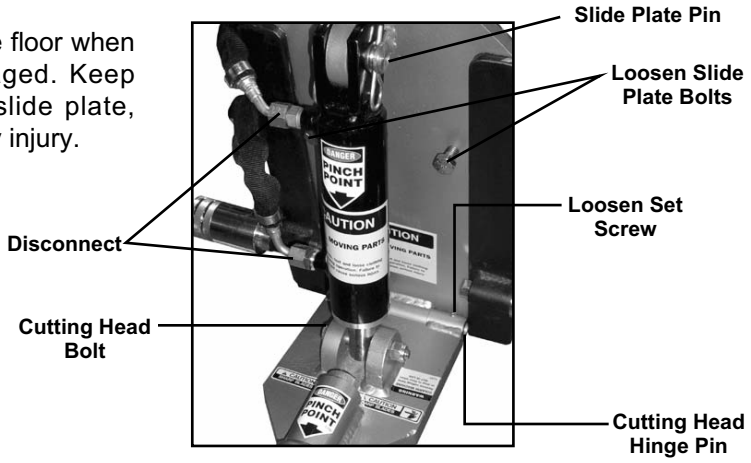

LOWER CUTTING HEAD SUPPORT

To Remove Lower Cutting Head Support

1. Lower slide plate so cutting head hinge pin is below machine bottom. Retighten.
2. Loosen both cutting head pin set screws at the base of the lower cutting head support (hinge area).
3. Drive cutting head pin out using a punch and hammer.
4. Remove cylinder securing hex head bolt.

LEAK MAINTENANCE

All fittings on this machine are O-ring style.

1. Disconnect machine from power.
2. If a leak is detected, tighten fitting with the proper wrench size. DO NOT over tighten. Over tightening could damage O-rings.
3. If a leak still persists, remove fitting and replace O-ring.

SIDE AND REAR PANELS

To Remove A Panel

1. Using proper wrench size, remove hood.
2. Remove desired side or rear panel.

OIL LEVEL

To Check Oil Level

1. Remove oil level plug (See Figure A). Plug is either on the front or the rear of the tank. If it is on the rear of the tank, the hood will need to be removed to access the plug.
2. Oil should be visual at the bottom of the oil level plug hole. If it is over filled, oil will run out of the plug hole until it is at the proper level.
3. Reinsert plug.

OIL CHANGE OUT

1. Disconnect machine from power.
2. Drain fluid by removing the drain plug from side of tank (See Figure B). **Take Caution:** this unit contains twelve gallons of fluid. Make sure you have the proper amount of containers to catch fluid.
3. Replace drain plug.
4. Remove filler plug (See Figure A).
5. Add oil into the filler plug hole until visual at the bottom of the oil level plug hole.

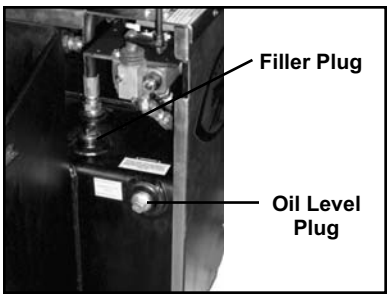

Figure A

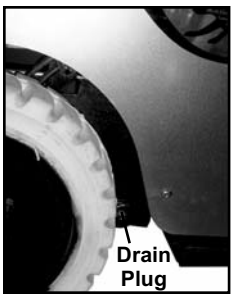

Figure B

WHEEL MOTOR CHANGE OUT

1. Disconnect machine from power.
2. Block up machine to remove wheel. See wheel changing on page 35.
3. Remove wheel.
4. Remove oil lines from wheel motor. A small amount of oil will run out of the lines. Drain into a container. Wipe up spills immediately.
5. Remove four ½" wheel motor securing nuts.
6. Pull out on wheel motor to remove.

5110 MACHINE MAINTENANCE

HOSE CHANGE OUT

To Remove Or Change A Hose

1. Disconnect machine from power.
2. Remove hood.
3. Using proper wrench size, remove hose from fitting.
4. When replacing, make sure O-ring is properly seated on hose fitting.

FOOT PEG

To Remove Or Replace Foot Peg

1. Insert a socket wrench into foot peg and secure bolt head.
2. Remove nut and washer.
3. Remove bolt and foot peg.
4. Replace foot peg before operating machine. DO NOT use machine without foot pegs.

PUMP CHANGE OUT

1. Disconnect machine from power.
2. Remove hood.
3. Remove lines from either side of pump. Have a container ready to catch leakage from lines.
4. Remove two 5/16" pump securing bolts.
5. Remove pump by pulling pump straight out from pump motor.

VALVE CHANGE OUT

1. Disconnect machine from power.
2. Remove hood.
3. Remove hoses from valve body. Have a container ready to catch leakage from lines.
4. Take notice of angle of valve fittings.
5. Remove two ¼" bolts securing valve body.

MOTOR CHANGE OUT

1. Disconnect machine from power.
2. Remove hood.
3. Remove four 9/16" bolts securing pump bracket and pump to motor.
4. Pull pump and bracket straight out from motor. It is not necessary to unhook pump hoses.
5. Remove motor.

MOTOR OVERLOAD SWITCH

Motor is equipped with a thermal overload switch. Switch will trip if motor runs too hot.

1. Let motor cool off.
2. Depress red button on end of motor junction box located on motor under the hood. Switch presses hard.

ELECTRICAL BOX

To Replace Electrical Box

1. Disconnect machine from power.
2. Remove hood.
3. Disconnect back-up beeper switch wiring.
4. Disconnect seat switch wires.
5. Remove two ¼" electrical box securing nuts.
6. Remove electrical box.

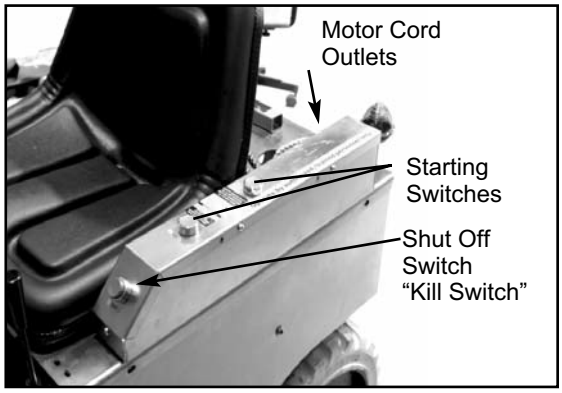

HYDRAULIC CYLINDER CHANGE OUT

1. Disconnect machine from power.
2. Disconnect cylinder lines. Have a container ready to catch oil from lines.
3. Remove cylinder securing hexhead bolt from lower cutting head support.
4. Remove clips and pin from cylinder and slide plate.
5. Remove cylinder upper pin.
6. Remove cylinder.

ELECTRICAL CORD

If the supply cord is damaged, it must be replaced by the manufacturer or its service agent or a similarly qualified person in order to avoid a hazard.

115 VOLT WIRE DIAGRAM

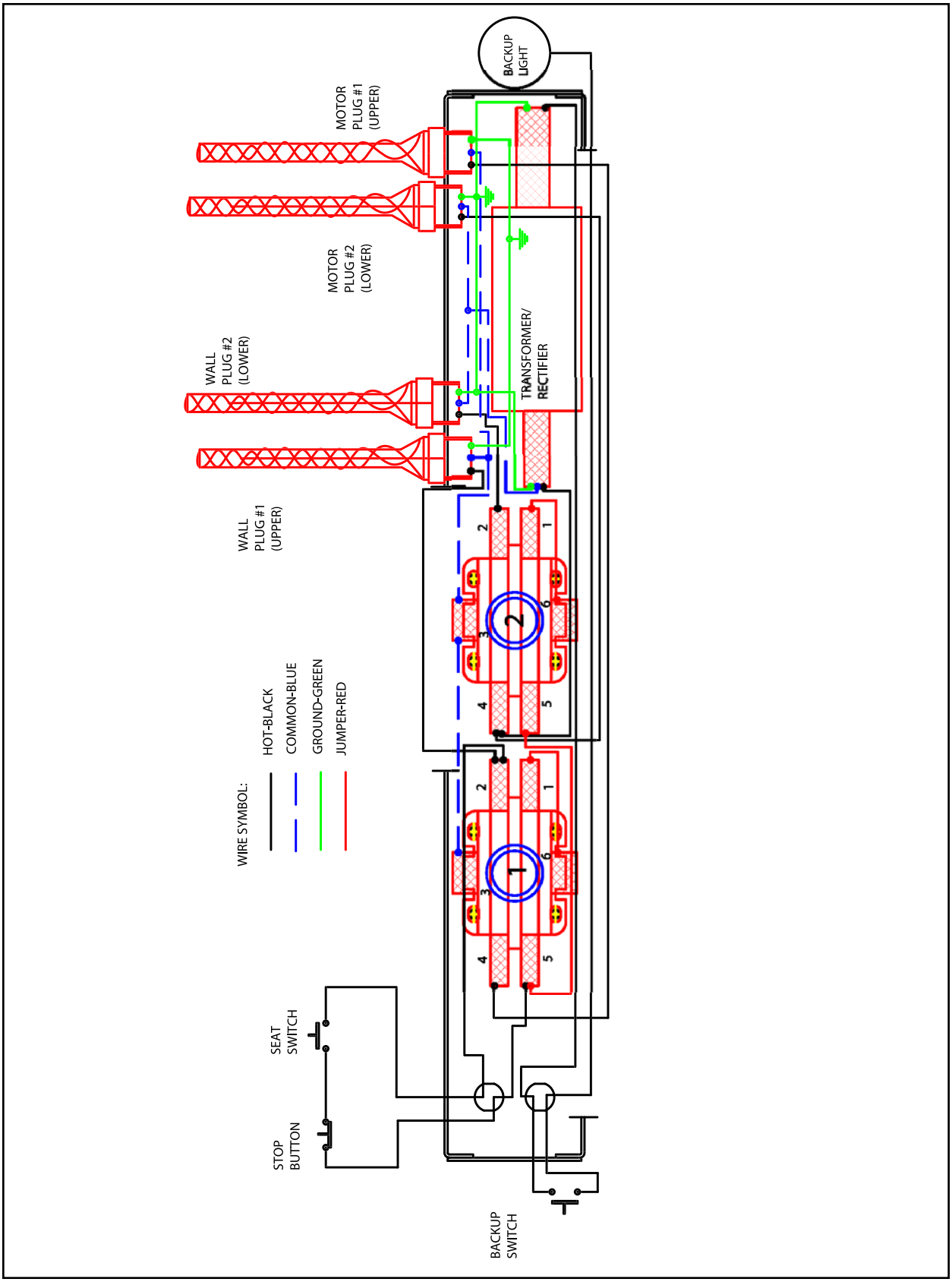

230 VOLT WIRE DIAGRAM

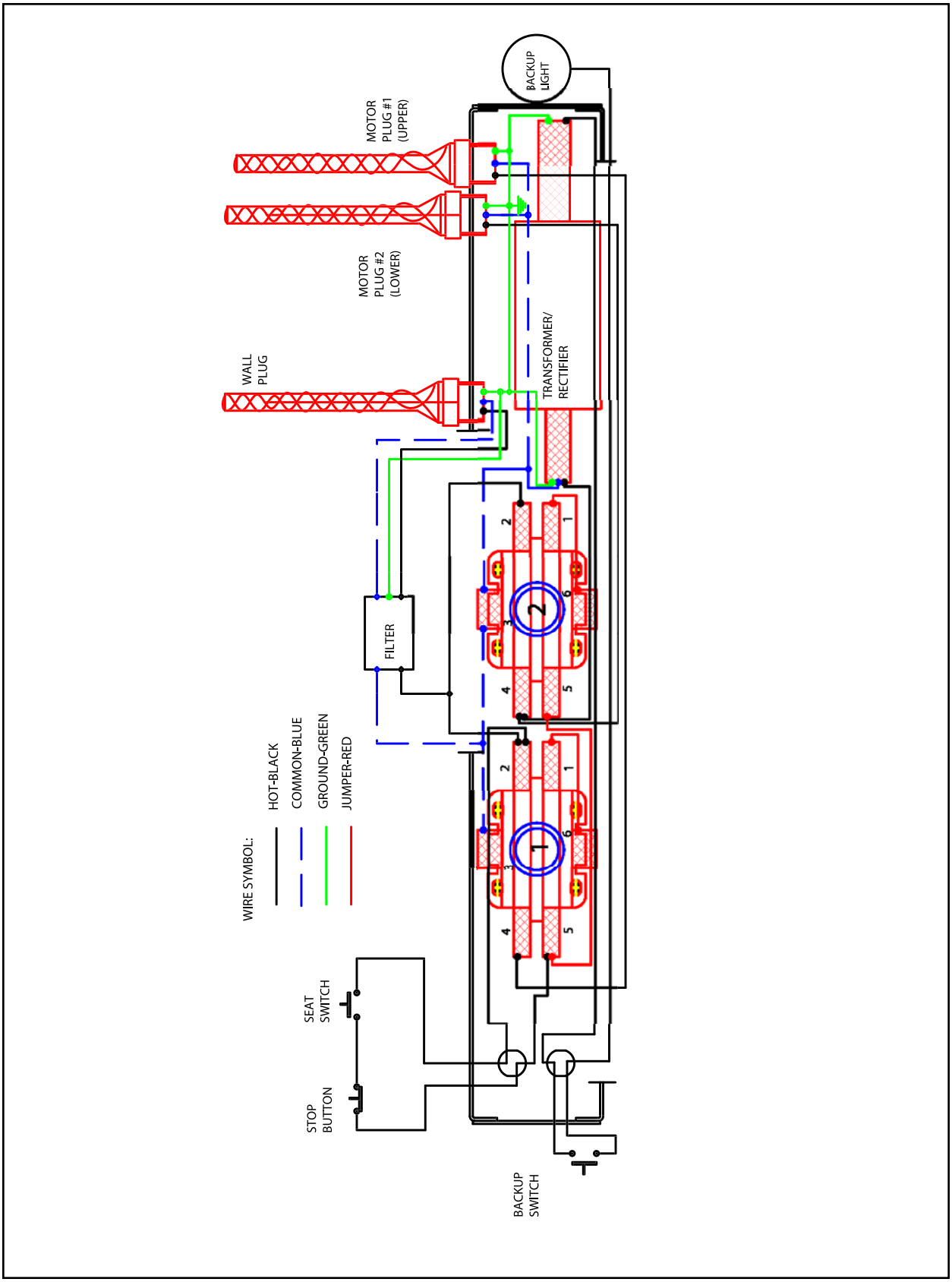

CORD GUIDE

To Adjust Cord Guide, rotate to either side.

To stand straight up.

1. Remove cord guide pin.
2. Adjust cord guide straight up position.
3. Reinsert cord guide pin.

Figure A

To Remove Cord Guide

1. Remove cord mounting bracket pin (See Figure A).
2. Remove cord guide.

To Remove Cord Guide Bracket

1. Remove cord guide as previously described.
2. Remove two cord guide securing nuts from underneath the hood.
3. Remove two cord guide securing screw.
4. Remove bracket.

WHEEL CHANGING

1. Jack machine up by pushing the cylinder lift forward to lower and adjust the angle of the cutting head to raise machine.
2. Place blocks under Forklift Cups on the side of the machine that wheel is being changed. **Take Caution:** Make sure machine is supported properly or serious injury could occur.
3. Let cylinder down resting machine on blocks allowing rear wheel to be lifted off the floor.
4. Remove five 1/2" lug nuts with an extended arm wrench, remove wheel.
5. Replace wheel.
6. Replace five lug nuts and tighten, making sure lug nuts are very tight.
7. Raise cylinder to raise machine off of blocks. Remove blocks and lower machine.
8. Repeat to other side if necessary.

CHANGING FILTER-Filter should be replaced yearly.

1. Remove the three filter cover bolts (See Figure B).
2. Lift out the filter (See Figure C).
3. Replace with new filter.
4. Replace cover spring.
5. Replace and firmly tighten bolts.

Figure B

Figure C

CASTER MAINTENANCE

1. Keep clean and free of debris, make sure it can move freely.
2. Give a shot of grease in grease zerc on caster every six months to keep moving freely.
3. To remove caster, machine will need to be raised. Push the cylinder lift lever forward to lower and adjust the angle of the cutting head to jack up the machine (See Figure A). Block up machine (See Figure B). Remove four bolts, pull caster off, clean/replace as needed.
4. Replace caster.
5. Replace and firmly tighten the four bolts.
6. Lower the machine.
7. Push the cylinder lift lever forward to lower and adjust the angle of the cutting head to jack up the machine (See Figure A).

Figure A

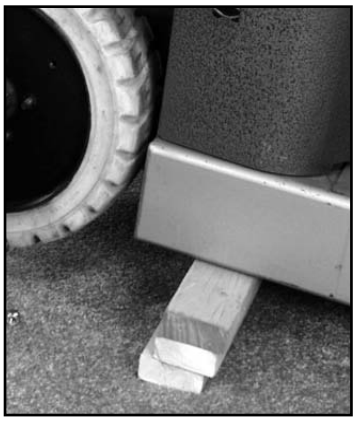

Figure B

BACK UP BEEPER AND LIGHT

To replace bulb: (FIGURE A)

- Pop off cover with a screwdriver.
- Wearing gloves or using a cloth, replace bulb. Do Not touch bulb. Do not get the oils from your hand on the bulb.
- Snap cover back on into position.

To replace back-up beeper switch: (FIGURE B)

- Remove two button hexhead screws on each side of the hood.
- Lift hood off and disconnect seat switch and back-up beeper switch.
- Remove both screws from the back-up beeper switch
- Remove and replace switch.
- Re-insert both screws into switch. Firmly tighten.
- Activating arm may need to be adjusted. Beeper should sound when valve handle has 1/3 movement. If it does not sound with 1/3 movement or sounds to quickly, adjust (bend) activating arm with a needle nose plier.
- Reconnect back-up beeper and seat switch wires.
- Replace hood and screws.

Figure A

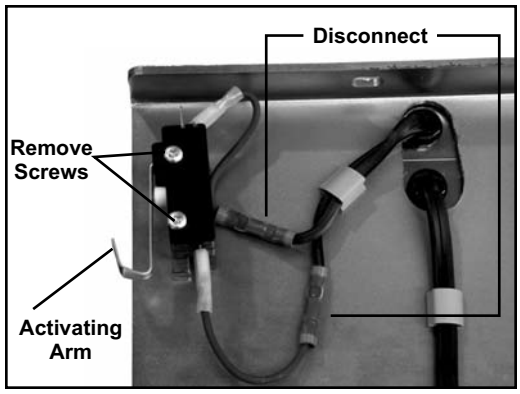

Figure B

⚠ **WARNING:** Do Not alter a switch. Do No defeat a safety device.

⚠ **WARNING:** The Back Up Beeper and Light are on the machine for safety. It is important to keep it in good working condition. Failure to do so could cause bodily injury.

SEAT REPLACEMENT

1. Remove two button hexhead screws on each side of the hood (4 times).
2. Lift hood off.
3. Disconnect seat switch and back-up beeper switch (See Figure A).
4. Remove four 5/16 button hexhead screws (See Figure A).
5. Remove seat.
6. To replace seat, set seat on top of hood.
7. Replace the four 5/16 button hexhead screws from underneath the hood.
8. Firmly tighten.
9. Reconnect back-up beeper and seat switch wires.
10. Replace hood and screws.

SEAT SAFETY SWITCH

The seat safety switch is mounted under the center portion of the seat. This switch is designed as an emergency shut off. If you are not sitting down on the seat, the machine will shut off.

1. Remove two button hexhead screws on each side of the hood (4 times).
2. Lift hood off.
3. Disconnect seat switch and back-up beeper switch (See Figure A).
4. Push down on three tabs (See Figure B).
5. Turn switch assembly counter-clockwise and remove switch (See Figure C).
6. Replace switch and turn clockwise to secure.
7. Reconnect seat switch and back-up beeper switch.
8. Replace hood and screws.

⚠ **WARNING:** Do Not alter a switch.

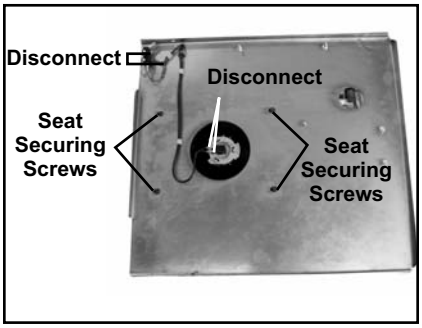

Figure A

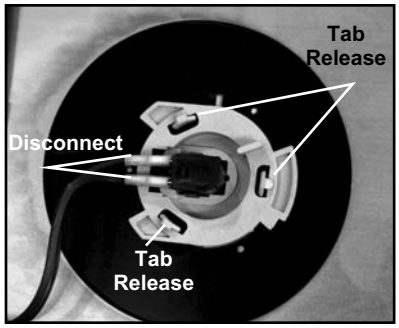

Figure B

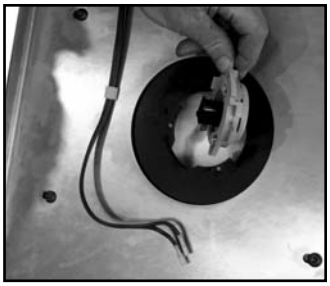

Figure C

#5200-258 DEBRIS DEFLECTOR MOUNTING INSTRUCTIONS

•Insert and secure a cutting head, making sure cutting head is **all the way in**.

•**If there are holes on your lower cutting head support,** place debris deflector under the lower cutting head support and bolt in place.

•**If there are not holes on the lower cutting head support,** place debris deflector on the lower cutting head support, measuring a 1" clearance between the cutting head and the front of the debris deflector. This clearance will reduce a “pinch point”.

•Secure with C-clamps.

•Mark the holes from the debris deflector on the lower cutting head support.

•Either drill a 1/2" hole on each mark and secure debris deflector with a bolt and lock nut **OR** drill a 27/64" hole and tap 1/2-13.

•Firmly secure debris deflector under the cutting head.

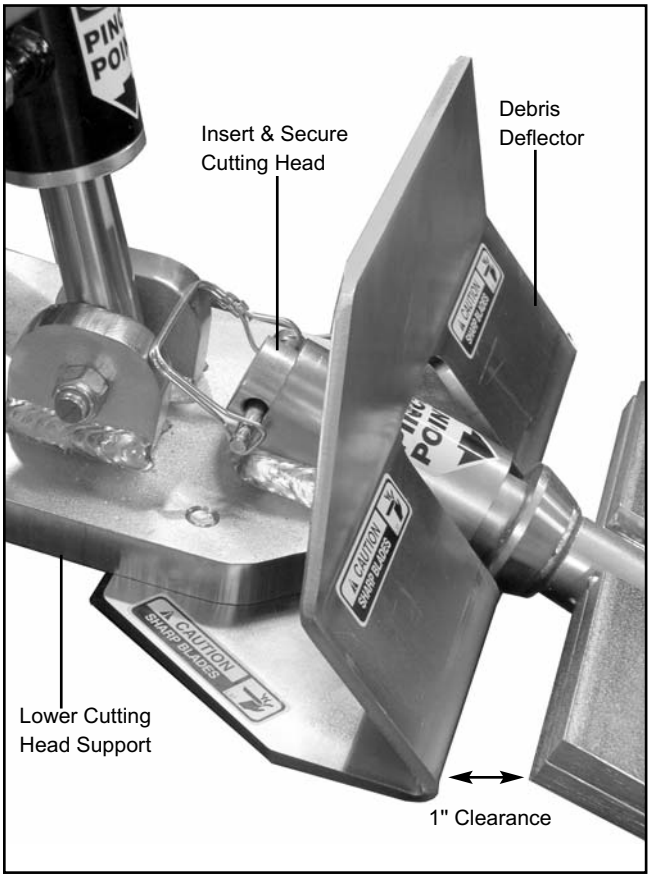

5110 COMPLETE PARTS LIST

PART #	DESCRIPTION
5110-6	PUMP MOUNTING BRACKET (OLD STYLE)
5110-6D	PUMP MOUNTING BRACKET (NEW STYLE)
5110-110	HOOD
5110-111	SEAT
5110-114	HYDRAULIC WHEEL MOTOR (2)
5110-114A	HIGH SPEED HYDRAULIC WHEEL MOTOR (2)
5110-114-2	WHEEL MOTOR FITTING (4)
5110-114-5	WHEEL MOTOR SET OF SEALS (OLD SYTLE) (NOT SHOWN)
5110-114-5A	WHEEL MOTOR SET OF SEALS (NEW SYTLE) (NOT SHOWN)
5110-115	SINGLE SPOOL CONTROL
5110-115-1	SINGLE SPOOL SEAL KIT (NOT SHOWN)
5110-115-2	3/16 PIN (3)
5110-116	DOUBLE SPOOL CONTROL
5110-116-3	DOUBLE SPOOL SEAL KIT ONLY (NOT SHOWN)
5110-116-4	HANDLE HOUSING (3)
5110-116-5	SOCKET HEAD CAP SCREW (6)
5110-117	WHEEL HUB (2)
5110-117-2	HUB NUT (2)
5110-118	POWER/ELECTRICAL CONTROL BOX COMPLETE
5110-120L	LEFT SIDE PANEL
5110-120R	RIGHT SIDE PANEL
5110-121	REAR PANEL
5110-124B	OIL PUMP SPACER (OLD STYLE)
5110-124C	OIL PUMP COUPLING (OLD STYLE)
5110-156	OIL LEVEL PLUG (2)
5110-157	DRAIN/FILL PLUG (2)
5110-162A-6	OPTIONAL POCKET WEIGHT (NOT SHOWN)
5110-164A	TANK HOSE
5110-164B	TANK HOSE CLAMP
5110-166	SLIDE PLATE
5110-167	LOWER CUTTING HEAD SUPPORT
5110-168	MOTOR POWER CORD
5110-170	CUTTING HEAD PIN
5110-171	MALE POWER CORD
5110-172	FEMALE POWER CORD
5110-174	SINGLE CAPACITOR 125 VAC (NOT SHOWN)
5110-175	SINGLE CAPACITOR COVER
5110-176A	OVERLOAD SWITCH
5110-177	HUBBLE TWIST LOCK MALE PLUG
5110-180	FOOT PEG (2)
5110-185	MOTOR FAN COVER
5110-186	MOTOR FAN (NOT SHOWN)
5110-187	CAPACITOR 240 VAC (2) (NOT SHOWN)
5110-188	DOUBLE CAPACITOR COVER
5110-191	SINGLE WHEEL CASTER ASSEMBLY (NOT SHOWN)
5110-191A	REPLACEMENT SINGLE WHEEL ONLY (NOT SHOWN)
5110-193	DOUBLE WHEEL CASTER ASSEMBLY (GREEN)
5110-193A	REPLACEMENT WHEEL ONLY (GREEN)
5110-193	DOUBLE WHEEL CASTER ASSEMBLY (GREEN)
5110-200	MOTOR MOUNT
5110-205	BACKUP LIGHT ASSEMBLY (OLD STYLE)
5110-205-1	LIGHT COVER ONLY (OLD STYLE)

PARTS LIST (continued)

PART #	DESCRIPTION
5110-206	BACKUP FLASHER BULB ONLY (OLD STYLE)
5110-207	SEAT SAFETY SWITCH
5110-208	ELECTRICAL BOX ONLY
5110-209	ELECTRICAL BOX COVER ONLY
5110-215	CORD GUIDE
5110-216	CORD GUIDE BRACKET
5110-217	BACK-UP BEEPER SPACER
5110-218	BACK-UP BEEPER SWITCH
5110-220	PUSH BUTTON ADAPTER (2)
5110-221-1	PUSH BUTTON ASSEMBLY (GREEN)
5110-222	PUSH BUTTON CONTACT
5110-223-1	PUSH BUTTON ASSEMBLY (RED)
5110-224	RELAY 120 VOLT
5110-225	RELAY 240 VOLT (NOT SHOWN)
5110-230	TRANSFORMER/RECTIFIER
5110-233	BREATHER ASSEMBLY
5110-235	FILTER “T” FITTING ASSEMBLY
5110-235-1	FILTER HOSE FITTING ONLY (2)
5110-235-2	FILTER “T” ONLY
5110-235-3	FILTER COUPLER ONLY
5110-235-4	FILTER ELBOW ONLY
5110-236	FILTER HOUSING ASSEMBLY
5110-236-1	REPLACEMENT FILTER RETURN
5110-236-3	FILTER REPLACEMENT O-RING KIT (SET OF 3)
5110-237	SUCTION FILTER SCREEN (INSIDE HYDRAULIC TANK)
5110-237-1	FILTER SUCTION LINE ASSEMBLY (2)
5110-237-1A	FILTER HOSE ONLY (2)
5110-237-1B	FILTER HOSE FITTING ONLY (4)
5110-238	FILTER O-RING SEAL (2)
5110-240	CROSS BRACE
5110-241-1	VERTICAL SUPPORT, RIGHT
5110-241-2	VERTICAL SUPPORT, LEFT
5110-250	CYLINDER
5110-250-3	CYLINDER SEAL KIT REPLACEMENT
5110-251	CYLINDER CONNECTING ROD
5110-252	CYLINDER CLIP (2)
5110-253	HYDRAULIC HOSE CONNECTOR
5110-253R	CYLINDER RESTRICTOR FITTING
5110-254	LOWER CYLINDER LINE
5110-255	UPPER CYLINDER LINE
5110-261	WHEEL MOTOR LINE (4)
5110-261-1	WHEEL MOTOR HOSE CLAMP ASSEMBLY (2)
5110-262	PRESSURE LINE (2)
5110-263	SUCTION LINE (2)
5110-264	45° VALVE FITTING (6)
5110-266	RETURN LINE (2)
5110-270	MOTION CONTROL LEVER (2)
5110-270-2	LEVER JAMB NUT 5/16 (2)
5110-271	LEVER BRACKET (3)
5110-272	CYLINDER LIFT LEVER ONLY
5110-301	BACKUP LIGHT ASSEMBLY (NEW STYLE)
5110-301-1	LIGHT COVER ONLY (NEW STYLE)
5110-301-2	LIGHT COVER SPRING ONLY (NEW STYLE)

PARTS LIST (continued)

PART #	DESCRIPTION
5110-302	BACKUP FLASHER BULB ONLY (NEW STYLE)
5110-402	WRENCH SET (NOT SHOWN)
5110-403	FRONT WEIGHT (SET OF 9) (NOT SHOWN)
5110-403-2	FRONT WEIGHT INDIVIDUAL
5110-404	REAR WEIGHT
5110-405	18" WHEEL RIM & TIRE
5110-408	13" WHEEL & RIM
5110-500	BUCK & BOOST TRANSFORMER
5110-501	VOLTAGE METER
5110-VI	INSTRUCTION VIDEO (NOT SHOWN)
5200-120-1	RUBBER BOOT ONLY
5200-194A	REPLACEMENT WHEEL ONLY (GREY)
5200-258	DEBRIS DEFLECTOR
6254	50 FT. SINGLE CORD 12 GAUGE (2)
70600	CORD SET (FOR #5110-230 TRANSFORMER/RECTIFIER)
70602	INSTRUCTION MANUAL TUBE
70603	INSTRUCTION TUBE CAP
70651	VALVE BODY PLUG (2)
70925	SPLINE SHAFT PUMP (NEW STYLE)
70951	LOVEJOY COUPLER 1/4" BORE, NO KEYWAY
70952	LOVEJOY COUPLER 7/8" BORE, 3/16 X 3/32 KEYWAY
70953	SPIDER
72366	MOTOR 115/230 VOLT, 1-1/2 HP, 1725 RPM
72804	STRAIN RELIEF (4)
72816	3/8 90° PUMP FITTING (NOT SHOWN)
73006	1/4-20 X 3/4 BUTTON HEAD CAP SCREW (4-HOOD, 8-REAR PANEL)
73008	1/4-20 NYLON LOCK NUT(4)
73021	1/4-20 X 2¼ HEXHEAD BOLT (4)
73047	¼ X 1 WOODRUFF KEY
73105	1/8 X 2 COTTER PIN (2)
73130	1/8 X 1/8 X 3/4 KEY (NOT SHOWN)
73201	3/8-16 X 1 HEXHEAD BOLT (4)
73203	3/8 FLAT WASHER (4-MOTOR MOUNT, 2-FRAME)
73204	3/8 SPLIT LOCK WASHER (4-PUMP MOUNT, 4-CROSS BRACE, 2-FOOT PEG)
73207	3/8-16 NYLON LOCK NUT (4-CORD GUIDE, 4-MOTOR MOUNT, 2-FRAME, 2-FOOT PEG)
73208	3/8-16 X 1½ HEXHEAD CAP SCREW (2-FOOT PEG)
73236	3/8-16 X 1 HEXHEAD BOLT (2-CORD GUIDE, 4-MOTOR MOUNT, 4-CROSS BRACE)
73240	3/8-16 CORD GUIDE SECURING T-BOLT
73248	5/16-18 X 1/4 SET SCREW (2)
73302	5/16 FLAT WASHER (4-SEAT-NOT SHOWN, 2-PUMP)
73303	5/16 SPLIT LOCK WASHER (2)
73305	5/16-18 X 3/4 HEXHEAD BOLT (4) (NOT SHOWN)
73307	5/16-18 X 1 HEXHEAD BOLT (2)
73308	5/16-18 X 3/4 BUTTON HEAD SOCKET CAP SCREW (2)
73324	5/16-18 X 3-1/4 BUTTON HEAD CAP SCREW
73345	5/16-18 X 1 (6)
73402	1/2-13 NYLON LOCK NUT (4-CASTER, 1-CYLINDER)
73403	1/2 SPLIT WASHER (2)
73406	1/2-13 X 1¼ HEXHEAD BOLT (4-CASTER, 1-REAR WEIGHT)
73407	1/2-13 X 1½ HEXHEAD BOLT (2)
73408	1/2-13 X 1 HEXHEAD BOLT (2)
73410	1/2-13 X 3-1/2 HEXHEAD BOLT
73430	1/2-20 NYLON LOCK NUT (10)

5110 COMPLETE PARTS LIST

PARTS LIST (continued)

PART #	DESCRIPTION
74428	10/32 FENDER WASHER (2)
74433	10-32 X 1/2 PHILLIPS HEAD SCREW (6-ELECTRICAL BOX, 2-BACKUP LIGHT [OLD STYLE])
74501	#6 FLAT WASHER (2)
74510	6-32 X 3/8 PANHEAD SCREW (2)
74513	6-32 X 3/4 PANHEAD SCREW (2)

ACCESSORIES

PART #	DESCRIPTION
5110-100	FRONT WHEEL ASSEMBLY
5110-100W	REPLACEMENT WHEEL ONLY
5110-111-3	OPTIONAL ARM REST/SET - LEFT & RIGHT ARMREST W/ MOUNTING HARDWARE INCLUDED
7050-6	CUTTING HEAD 6"
7050-8	CUTTING HEAD 8"
7050-8RBH	RAZOR BLADE HEAD 8"
7050-10	CUTTING HEAD 10"
7050-12	CUTTING HEAD 12"
7050-12RBH	RAZOR BLADE HEAD 12"
7050-14	CUTTING HEAD 14"
7050-14RBH	RAZOR BLADE HEAD 14"
7050-15	CUTTING HEAD EXTENSION
7050-27	CUTTING HEAD 27"
7074	5" X 27"X 6" HIGH TILE BOX
73270	3/8 X 3 PIN

BLADES

PART	DESCRIPTION
135	5" X 16" BLADE
147	4" X 6" BLADE
148	5" X 6" BLADE
363-2	3/4" X 8" RAZOR/SCRAPER BLADE (50/PKG)
368-8	7/8" X 8" RAZOR/SCRAPER BLADE (50/PKG)
368-12	7/8" X 12" RAZOR/SCRAPER BLADE (50/PKG)
368-15	7/8" X 15" RAZOR/SCRAPER BLADE (50/PKG)
6258-BU	3" X 12" SELF SCORING BLADE - BEVEL UP
6259-BU	3" X 14" SELF SCORING BLADE - BEVEL UP
6260-BD	3" X 6" HEAVY DUTY DITCHING
6281	3" X 8" HEAVY DUTY BLADE
6282	3" X 14" HEAVY DUTY BLADE
6283	3" X 27" HEAVY DUTY BLADE
6284	3" X 12" HEAVY DUTY BLADE
6285	3" X 6" HEAVY DUTY BLADE
6286	3" X 10" HEAVY DUTY BLADE
6290	3" X 6" EXTRA HEAVY DUTY BLADE
6291	3" X 8" EXTRA HEAVY DUTY BLADE
6292	3" X 12" EXTRA HEAVY DUTY BLADE
6293	3" X 14" EXTRA HEAVY DUTY BLADE
6294	3" X 27" EXTRA HEAVY DUTY BLADE
7050-200	3" X 6" PREMIUM HIGH TEMPERED BLADE
7050-201	3" X 8" PREMIUM HIGH TEMPERED BLADE
7050-202	3" X 10" PREMIUM HIGH TEMPERED BLADE
7050-203	3" X 12" PREMIUM HIGH TEMPERED BLADE
7050-204	3" X 14" PREMIUM HIGH TEMPERED BLADE

5110 COMPLETE PARTS LIST

BLADES (continued)

PART #	DESCRIPTION
7050-205	3" X 27" PREMIUM HIGH TEMPERED BLADE
7070-2	4" X 2" STRAIGHT SHANK BLADE
7070-3	4" X 3" STRAIGHT SHANK BLADE
7070-4	4" X 4" STRAIGHT SHANK BLADE
7070-6	4" X 6" STRAIGHT SHANK BLADE
7071-2	4" X 2" ANGLE SHANK BLADE
7071-3	4" X 3" ANGLE SHANK BLADE
7071-4	4" X 4" ANGLE SHANK BLADE
7071-6	4" X 6" ANGLE SHANK BLADE
7072-2	4" X 2" STRAIGHT SHANK W/CARBIDE TIP
7072-3	4" X 3" STRAIGHT SHANK W/CARBIDE TIP
7072-4	4" X 4" STRAIGHT SHANK W/CARBIDE TIP
7072-6	4" X 6"STRAIGHT SHANK W/CARBIDE TIP
7075-8	2" X 8" TAPERED CUTTING HEAD SHANK
7075-11	2" X 11" TAPERED CUTTING HEAD SHANK
7077-8	3.5" X 8" TAPERED CUTTING HEAD SHANK
7077-11	3.5" X 11" TAPERED CUTTING HEAD SHANK
7076-8	2" X 8" TAPERED W/CARBIDE TIP
7076-11	2" X 11" TAPERED W/CARBIDE TIP
7078-8	3.5" X 8" TAPERED W/CARBIDE TIP
7078-11	3.5" X 11" TAPERED W/CARBIDE TIP
7079-2	2" X 6" ULTRA HD CERAMIC EPOXY BLADE
7079-4	4" X 6" ULTRA HD CERAMIC EPOXY BLADE
7079-6	6" X 6" ULTRA HD CERAMIC EPOXY BLADE
7081	3" X 10" INCREASED ANGLE BLADE
7083	3" X 8" INCREASED ANGLE BLADE

LABELS

PART #	DESCRIPTION
L08-1	STAND CLEAR LABEL (2)
L33B	CAUTION MOVING PARTS LABEL (2)
L33C	INSTRUCTION MANUAL LABEL
L33D	AUTHORIZED PERSONNEL LABEL
L37	CAUTION SHARP BLADES LABEL (2)
L38	DISCONNECT BEFORE SERVICE LABEL
L66	LARGE CAUTION LABEL
L95B	ON/OFF SWITCH LABEL
L95F	FLUID LEAK LABEL (2)
L95J	VOLTAGE LABEL 110V (4)
L98	BLADE LIFT LABEL
L101	KILL SWITCH LABEL
L106	PINCH POINT LABEL (2)
L110A	ON LABEL (2)
L110B	OFF LABEL
L118	OPERATOR MUST BE SEATED LABEL (2)
L137	DISARM MACHINE LABEL (3)
L141	FLAG - MADE IN USA LABEL (2)
L147	5110-W SERIAL NUMBER (230V) LABEL (NOT SHOWN)
L148	CAUTION GENERAL INFO LABEL
L152	EARTH GROUND LABEL (2) (NOT SHOWN)
L176	NATIONAL LABEL - LARGE (2)

5110 PART NUMBERS & DIAGRAMS

HOOD & EXTERNAL PARTS

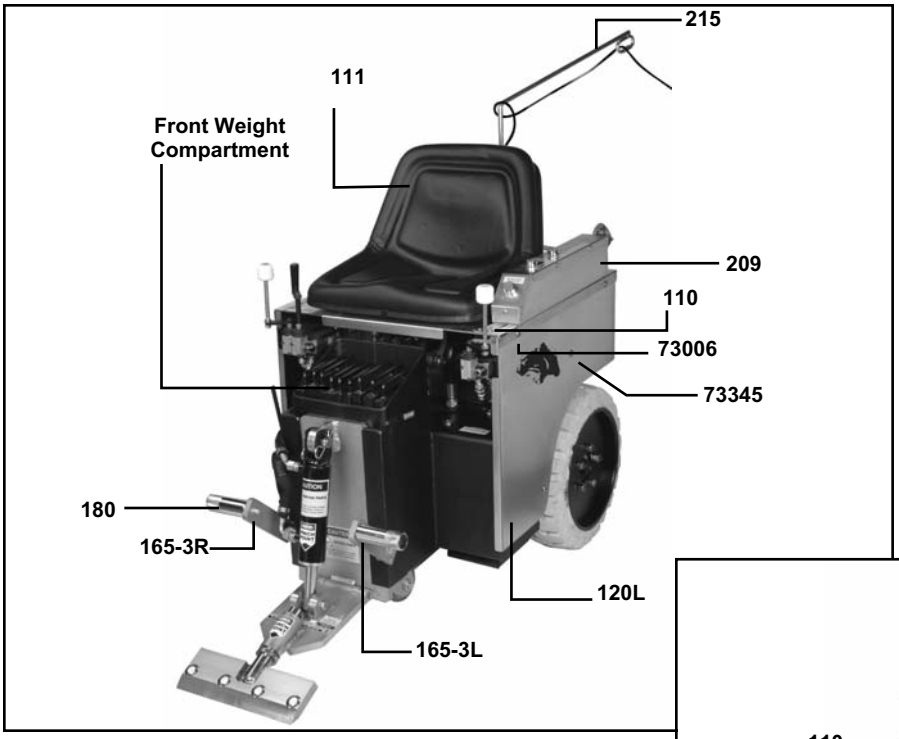

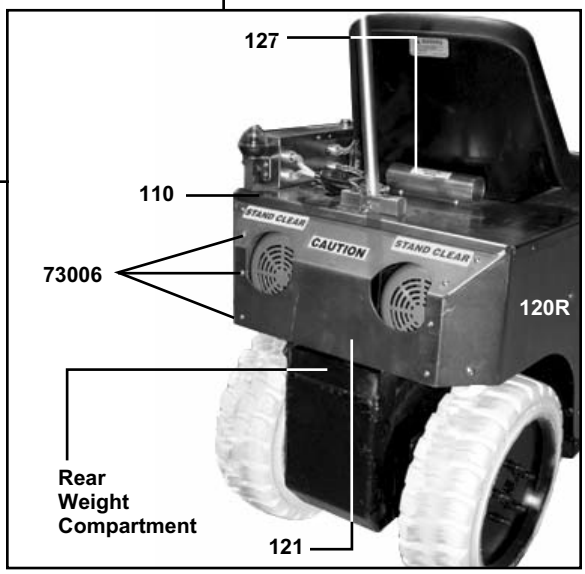

PART #	DESCRIPTION
5110-110	Hood
5110-111	Seat
5110-120L	Left Side Panel
5110-120R	Right Side Panel
5110-121	Rear Panel
5110-127	Instruction Manual Tube
5110-165-3L	Foot Rest Extension Bracket, Left
5110-165-3R	Foot Rest Extension Bracket, Right
5110-180	Foot Peg

PART #	DESCRIPTION
5110-209	Electrical Box Cover Only
5110-215	Cord Guide
5110-403	Front Weight (set of 9) (Not Shown)
5110-404	Rear Weight (Not Shown)
5110-404-1	Rear Weight Securing Hexhead Bolt 1/2-13 x 1¼ (Not Shown)
73006	1/4-20 x 3/4 Button Head Cap Screw (12)
73302	5/16 Flat Washer (4) (Not Shown)
73305	5/16-18 x 3/4 Hexhead Bolt (4)(Not Shown)
73345	5/16-18 x 1 Button Head Cap Screw (6)

5110 PART NUMBERS & DIAGRAMS

ELECTRICAL BOX PARTS

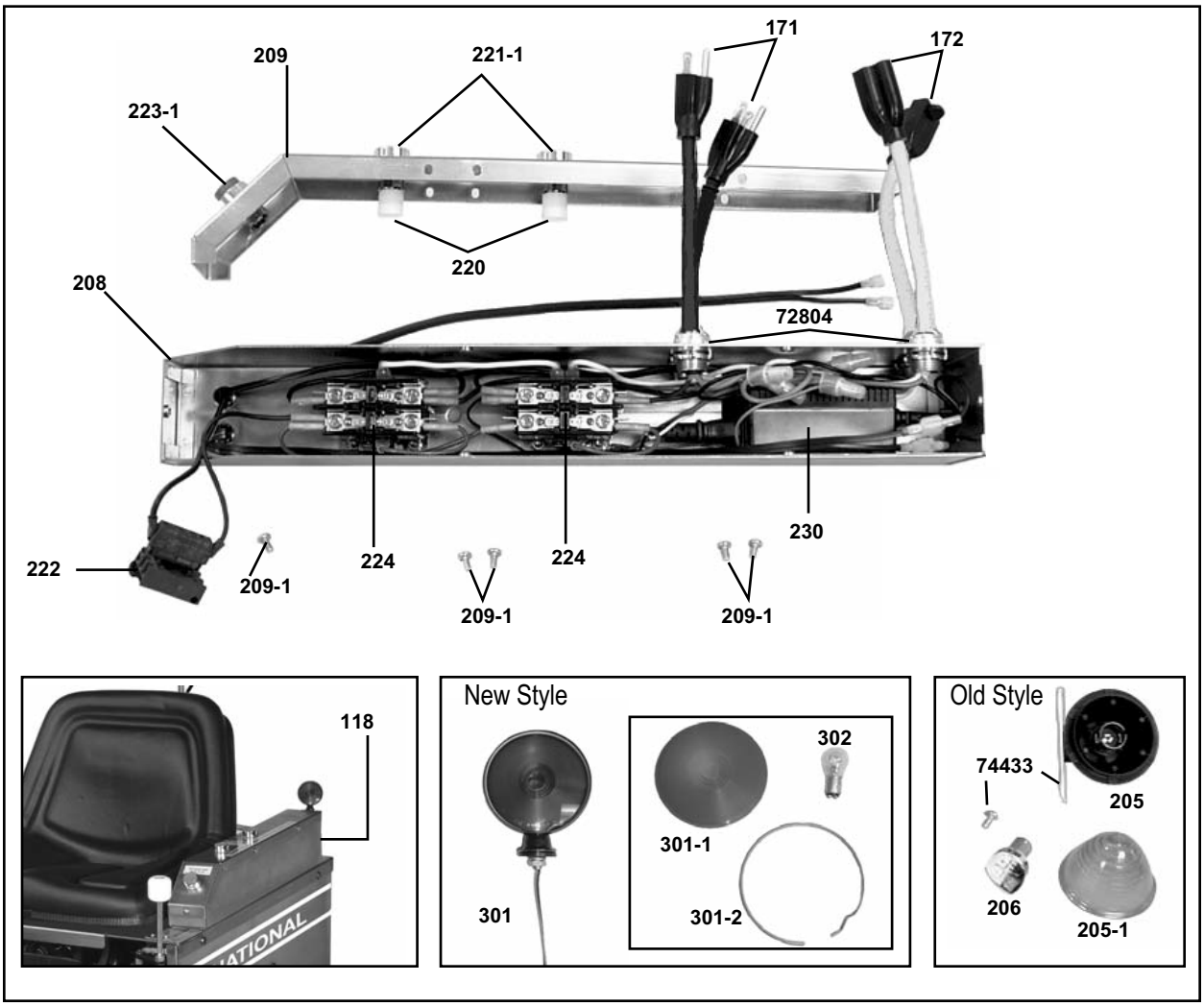

PART #	DESCRIPTION
5110-118	Power/Electrical Control Box Complete
5110-171	Male Power Cord
5110-172	Female Power Cord
5110-205	Backup Light Assembly (Old Style)
5110-205-1	Light Cover Only (Old Style)
5110-206	Backup Flasher Bulb Only (Old Style)
5110-208	Electrical Box Only
5110-209	Electrical Box Cover Only
5110-220	Push Button Adapter (2)
5110-221-1	Push Button Assembly (Green)
5110-222	Push Button Contact

PART #	DESCRIPTION
5110-223-1	Push Button Assembly (Red)
5110-224	Relay 120 Volt
5110-225	Relay 240 Volt (Not Shown)
5110-230	Transformer/Rectifier
5110-301	Backup Light Assembly (New Style)
5110-301-1	Light Cover Only (New Style)
5110-301-2	Light Cover Spring Only (New Style)
5110-302	Backup Flasher Bulb Only (New Style)
70600	Cord Set (for #5110-230 Transformer/Rectifier)
72804	Strain Relief (4)
74433	10-32 x 1/2 Phillips Head Screw (8) (Old Style)

5110 PART NUMBERS & DIAGRAMS

SWITCH & BACK-UP BEEPER PARTS

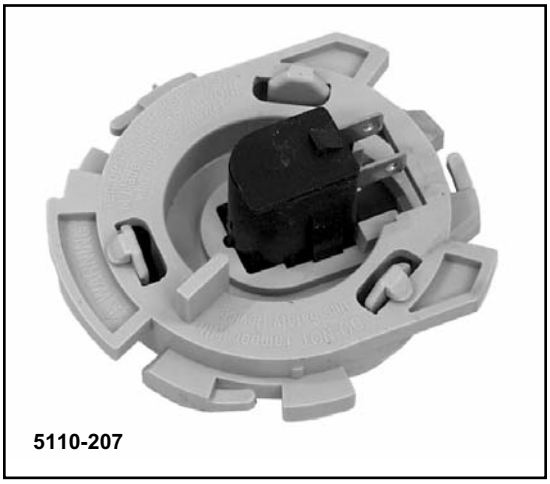

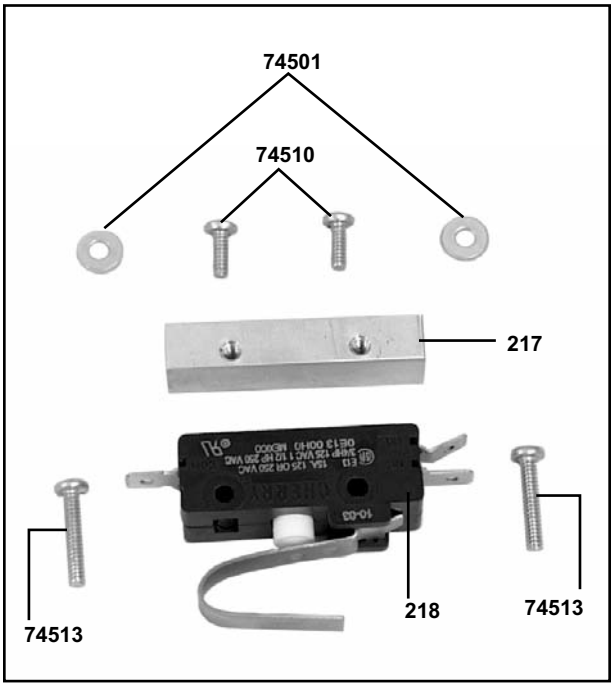

PART #	DESCRIPTION
5110-207	Seat Safety Switch
5110-217	Back-Up Beeper Spacer
5110-218	Back-Up Beeper Switch
5200-120-1	Rubber Boot Only

PART #	DESCRIPTION
74501	#6 Flat Washer (2)
74510	6-32 x 3/8 Panhead Screw (2)
74513	6-32 x 3/4 Panhead Screw (2)

5110 PART NUMBERS & DIAGRAMS

INSTRUCTION TUBE & CORD GUIDE PARTS

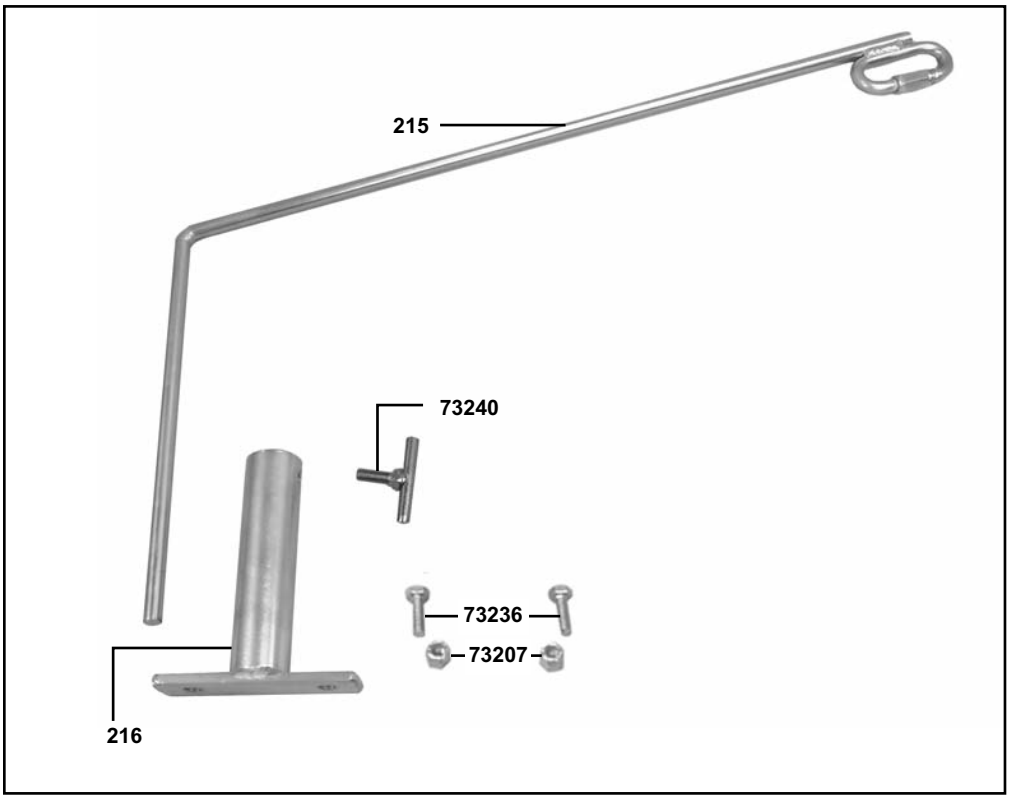

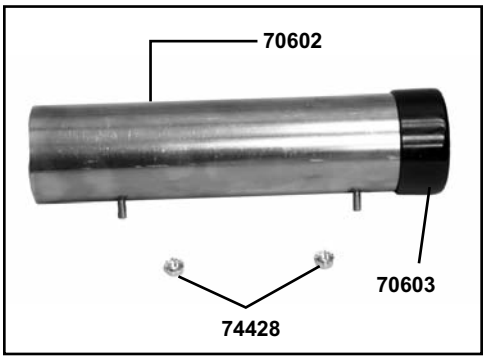

PART #	DESCRIPTION
5110-215	Cord Guide
5110-216	Cord Guide Bracket
5110-216-3	3/8-16 x 1 Hexhead Bolt (2)
5110-216-4	3/8-16 Nylon Lock Nut (2)
6254	50 Ft. Single Cord 12 Gauge (2)
70602	Instruction Manual Tube

PART #	DESCRIPTION
70603	Instruction Tube Cap
73207	3/8-16 Nylon Lock Nut (2)
73236	3/8-16 x 1 Hexhead Bolt (2)
73240	3/8-16 Cord Guide Securing T-Bolt
74428	10/32 Fender Washer (2)

MOTOR

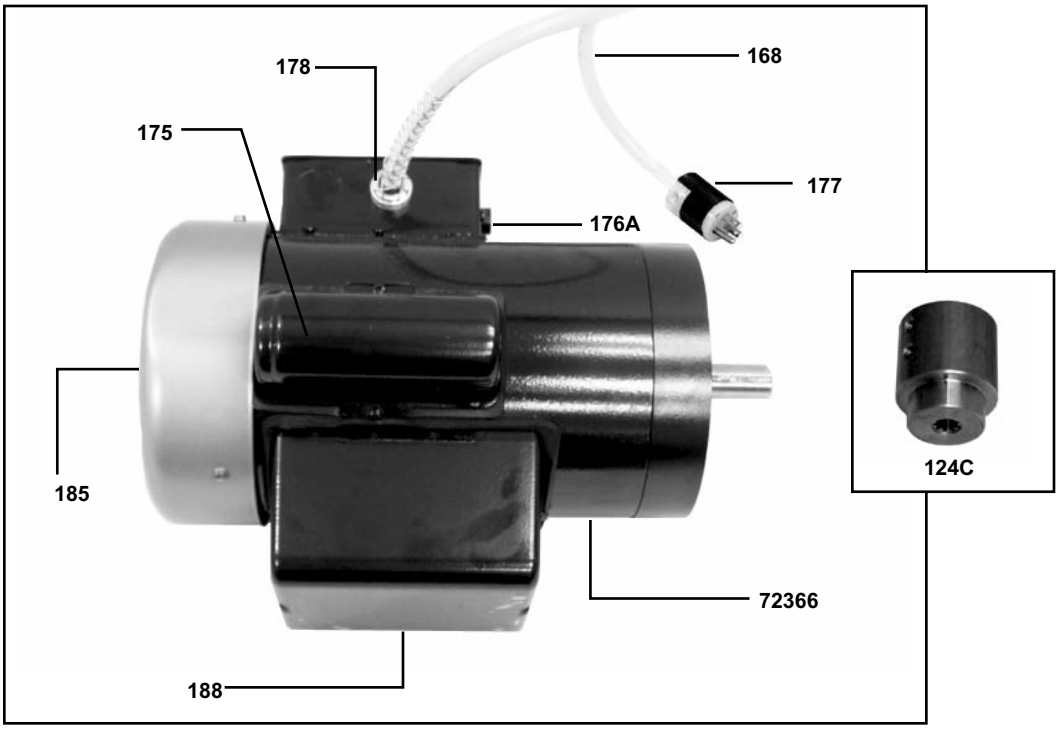

PART #	DESCRIPTION
5110-124C	Oil Pump Coupling
5110-168	Motor Power Cord
5110-174	Single Capacitor 125 Vac (Not Shown)
5110-175	Single Capacitor Cover
5110-176A	Overload Switch
5110-177	Hubble Twist Lock Male Plug

PART #	DESCRIPTION
5110-178	Strain Relief
5110-185	Motor Fan Cover
5110-186	Motor Fan (Not Shown)
5110-187	Capacitor 240 Vac (2) (Not Shown)
5110-188	Double Capacitor Cover
72366	Motor 115/230 Volt, 1-1/2 HP, 1725 RPM

5110 PART NUMBERS & DIAGRAMS

PUMP PARTS

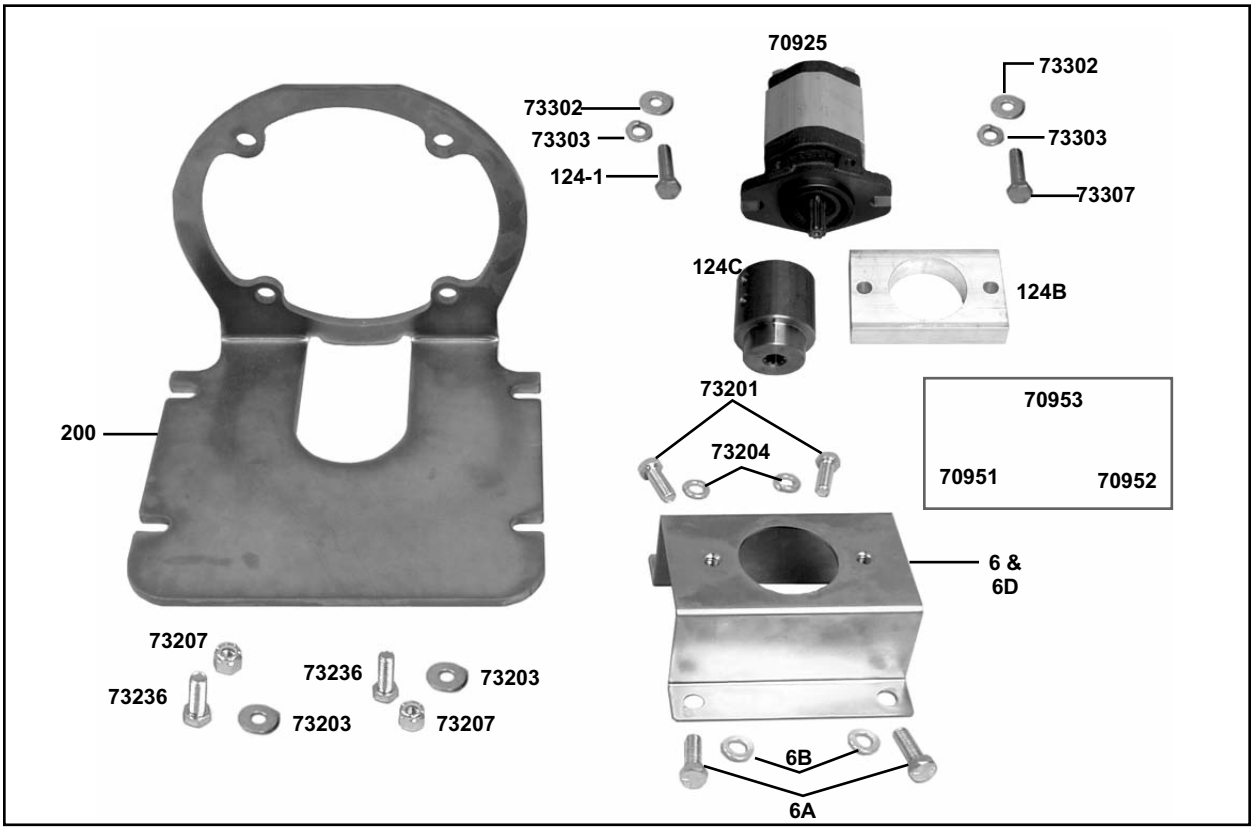

PART #	DESCRIPTION
5110-6	Pump Mounting Bracket (Old Style)
5110-6D	Pump Mounting Bracket (New Style)
5110-124B	Oil Pump Spacer (Old Style)
5110-124C	Oil Pump Coupling (Old Style)
5110-200	Motor Mount
70925	Spline Shaft Pump (New Style)
70951	Lovejoy coupler 1/4” Bore, No Keyway
70952	Lovejoy coupler 7/8” Bore, 3/16 x 3/32 Keyway
70953	Spider

PART #	DESCRIPTION
73130	1/8 x 1/8 x 3/4 Pump Key (Not Shown)
73201	3/8-16 x 1 Hexhead Bolt (4)
73203	3/8 Flat Washer (4)
73204	3/8 Split Lock Washer (4)
73207	3/8-16 Nylon Lock Nut (4)
73236	3/8-16 x 1 Hexhead Bolt (4)
73302	5/16 Flat Washer (2)
73303	5/16 Split Lock Washer (2)
73307	5/16-18 x 1 Hexhead Bolt (2)

5110 PART NUMBERS & DIAGRAMS

FRAME & SUPPORT PARTS

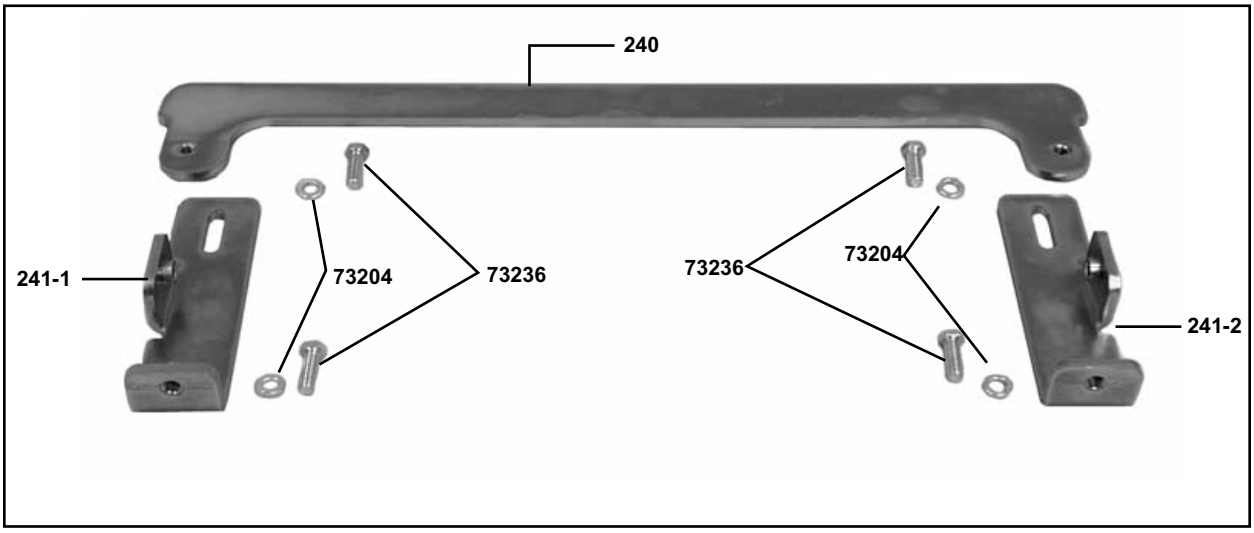

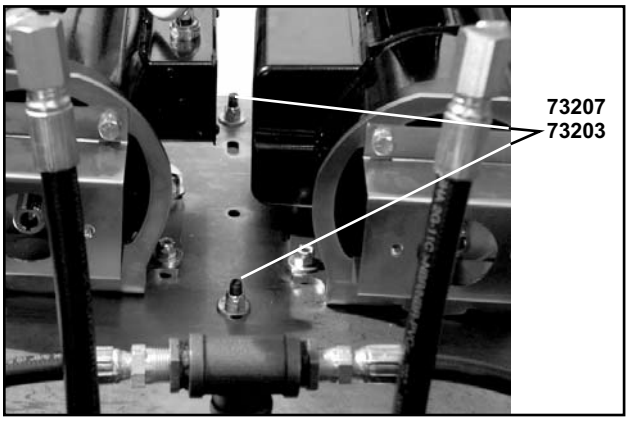

PART #	DESCRIPTION
5110-240	Cross Brace
5110-240-2	3/8 Split Lock Washer (4)
5110-241-1	Vertical Support, Right
5110-241-2	Vertical Support, Left

PART #	DESCRIPTION
73203	3/8 SAE Flat Washer (2)
73204	3/8 Split Lock Washer (4)
73207	3/8-16 Nylon Lock Nut (2)
73236	3/8-16 x 1 Hexhead Bolt (4)

5110 PART NUMBERS & DIAGRAMS

WHEEL PARTS

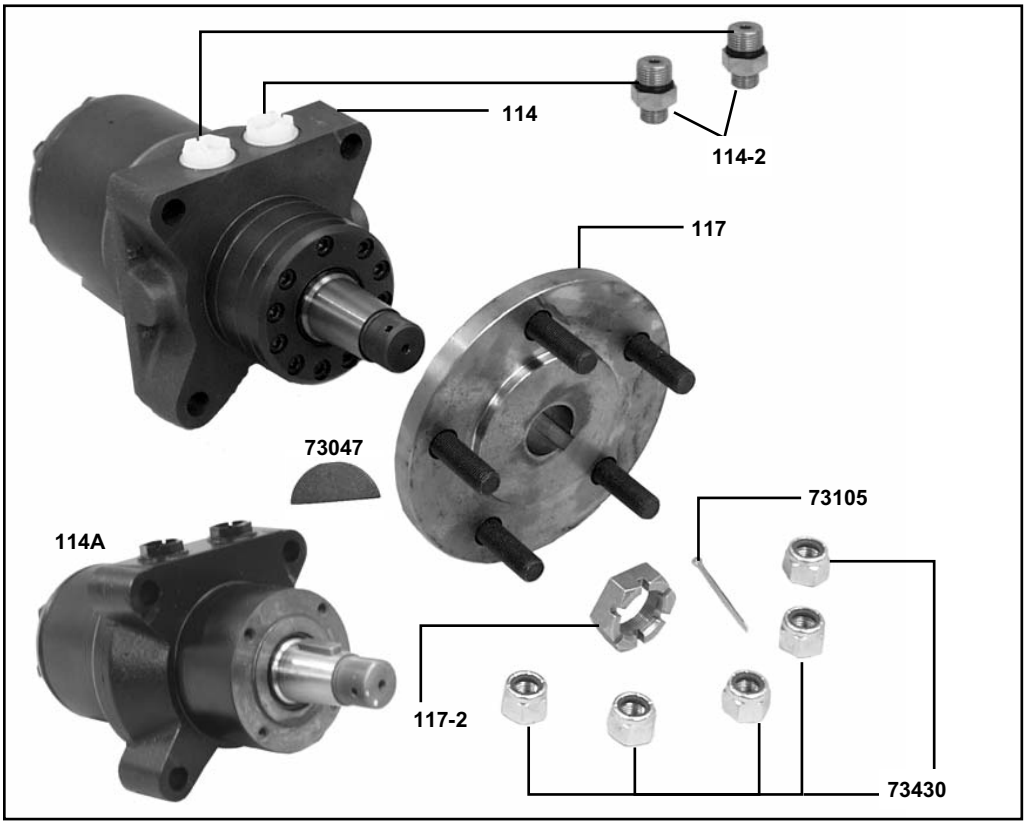

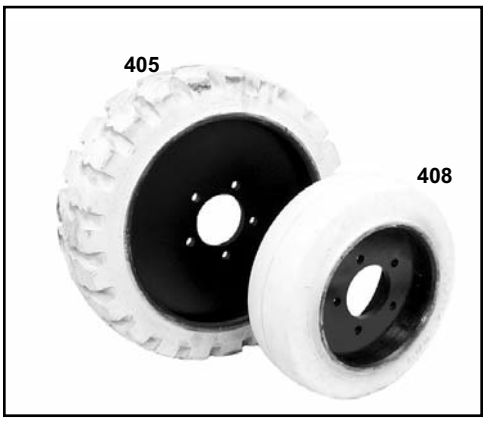

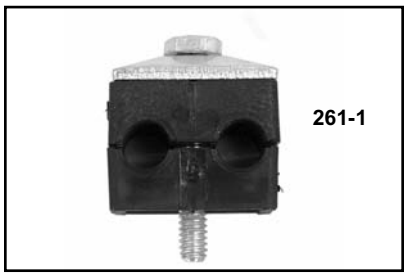

PART #	DESCRIPTION
5110-114	Hydraulic Wheel Motor (2)
5110-114A	High Speed Hydraulic Wheel Motor (2)
5110-114-2	Wheel Motor Fitting (4)
5110-114-5	Wheel Motor Set of Seals (Old Style) (Not Shown)
5110-114-5A	Wheel Motor Set of Seals (New Style) (Not Shown)
5110-117	Wheel Hub (2)

PART #	DESCRIPTION
5110-117-2	Hub Nut (2)
5110-261-1	Wheel Motor Hose Clamp Assembly (2)
5110-405	18" Wheel Rim & Tire
5110-408	13" Wheel & Rim
73047	¼ x 1 Woodruff Key
73105	1/8 x 2 Cotter Pin (2)
73430	1/2-20 Nylon Lock Nut (10)

5110 PART NUMBERS & DIAGRAMS

SINGLE SPOOL & HOSE PARTS

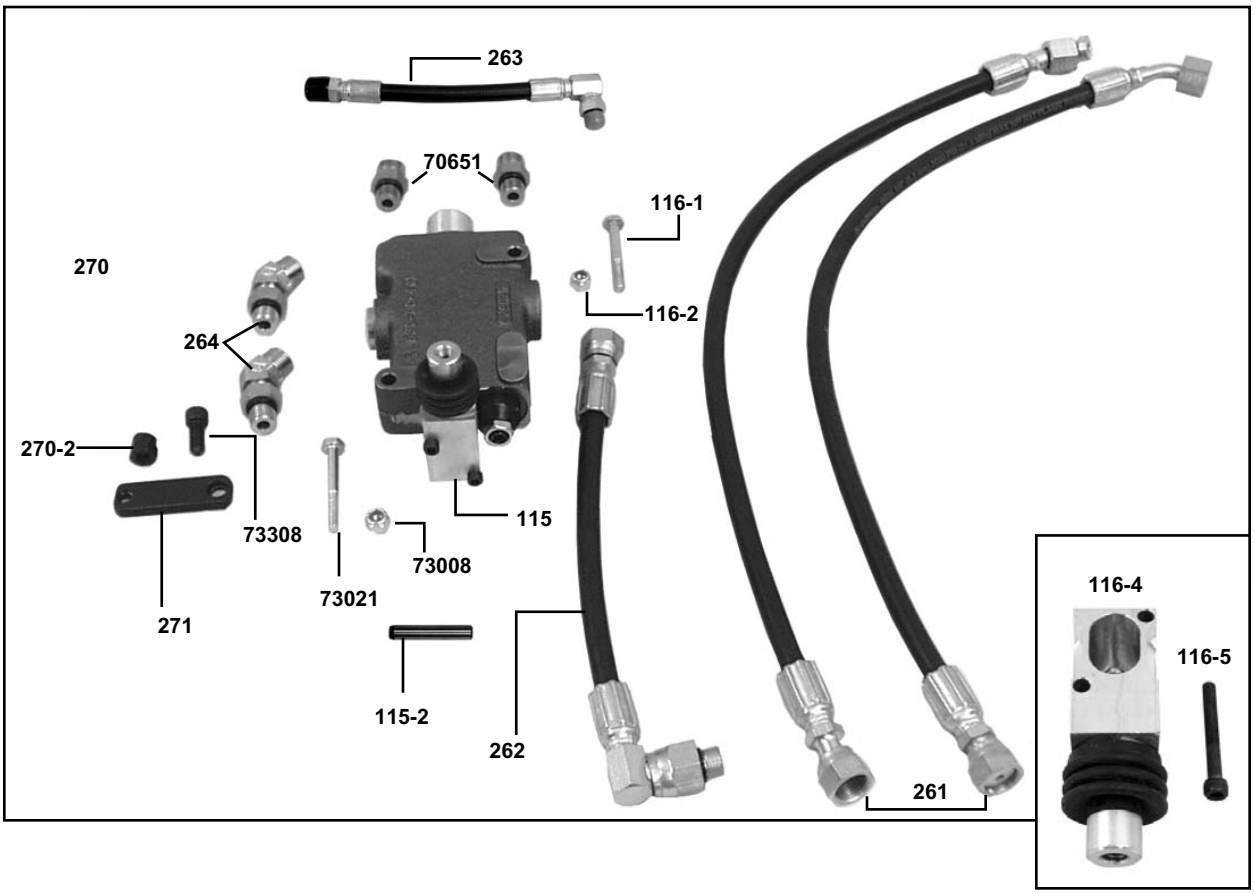

PART #	DESCRIPTION
5110-115	Single Spool Control
5110-115-1	Single Spool Seal Kit (Not Shown)
5110-115-2	Valve Pin 3/16"
5110-116-4	Handle Housing (1)
5110-116-5	Housing Socket Head Cap Screw (2)
5110-219	Straight Valve Fitting (2)
5110-261	Wheel Motor Line (4)
5110-262	Pressure Line (2)
5110-263	Suction Line (2)

PART #	DESCRIPTION
5110-264	45° Valve Fitting (2)
5110-270	Motion Control Lever (2)
5110-270-2	Lever Jamb Nut 5/16 (2)
5110-271	Lever Bracket (3)
72816	3/8 90° Pump Fitting (Not Shown)
73008	1/4-20 Nylon Lock Nut (4)
73021	1/4-20 x 2¼ Hexhead Bolt (4)
73308	5/16-18 x 3/4 Button Head Cap Screw (2)

DOUBLE SPOOL & HOSE PARTS

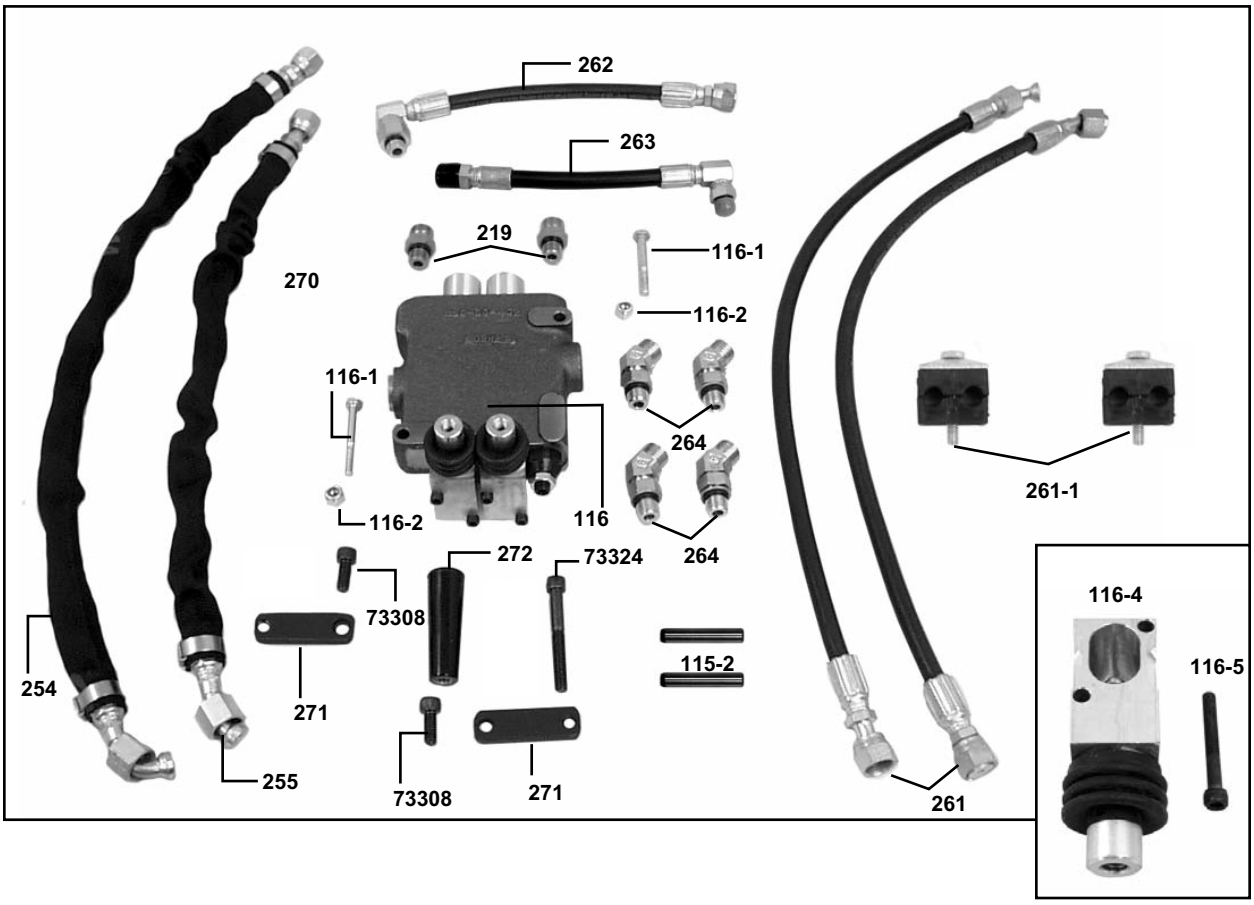

PART #	DESCRIPTION
5110-115-2	Valve Pin 3/16" (2)
5110-116	Double Spool Control
5110-116-1	Spool Control Hexhead Bolt 1/4-20 x 2-1/4 (4)
5110-116-2	Spool Control Nylock Nut 1/4-20 (4)
5110-116-3	Double Spool Seal Kit Only (Not Shown)
5110-116-4	Handle Housing (2)
5110-116-5	Housing Socket Head Cap Screw (4)
5110-219	Straight Valve Fitting (2)
5110-254	Lower Cylinder Line
5110-255	Upper Cylinder Line
5110-261	Wheel Motor Line (4)

PART #	DESCRIPTION
5110-261-1	Wheel Motor Hose Clamp Assembly (2)
5110-262	Pressure Line (2)
5110-263	Suction Line (2)
5110-264	45° Valve Fitting (4)
5110-270	Motion Control Lever (2)
5110-270-2	Lever Jamb Nut 5/16 (2)
5110-271	Lever Bracket (3)
5110-272	Cylinder Lift Lever Only
73308	5/16-18 x 3/4 Button Head Socket Cap Screw (2)
73324	5/16-18 x 3¼ Socket Head Cap Screw

5110 PART NUMBERS & DIAGRAMS

SLIDE PLATE & CYLINDER PARTS

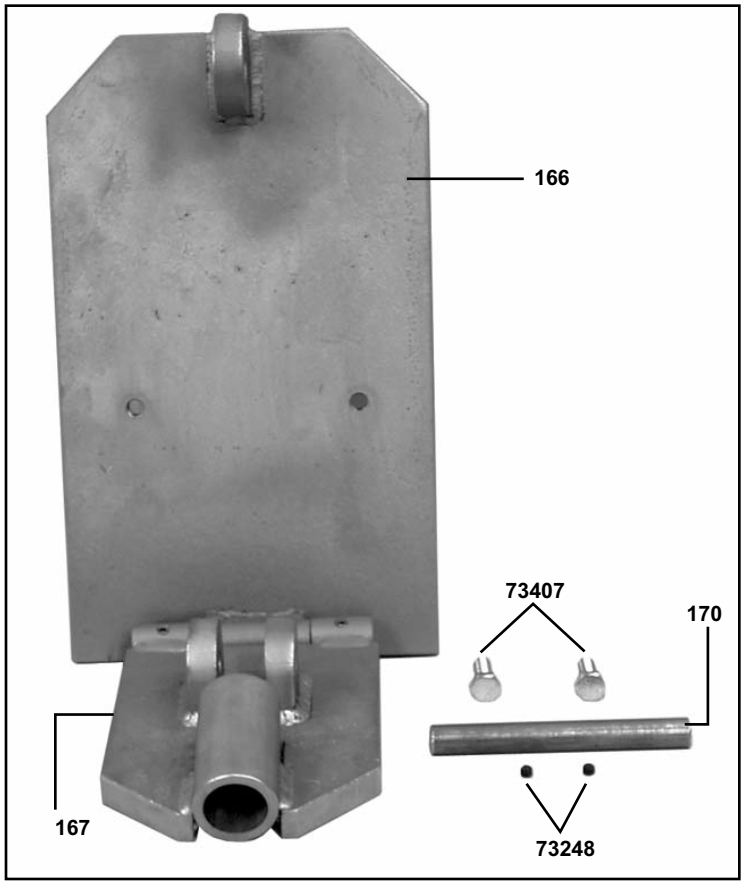

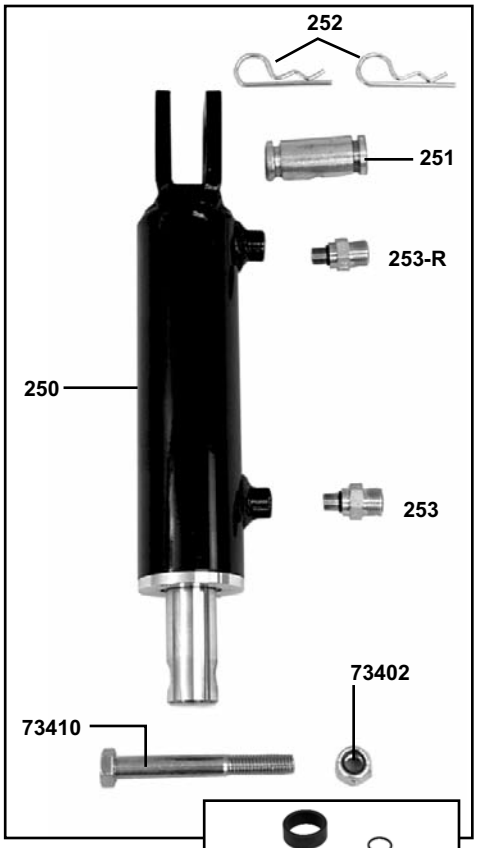

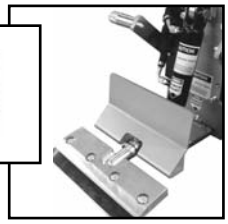

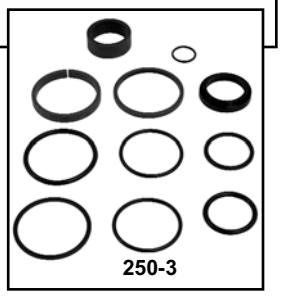

PART #	DESCRIPTION
5110-166	Slide Plate
5110-167	Lower Cutting Head Support
5110-170	Cutting Head Pin
5110-250	Cylinder
5110-250-3	Cylinder Seal Kit Replacement
5110-251	Cylinder Connecting Rod
5110-252	Cylinder Clip (2)

PART #	DESCRIPTION
5110-253	Hydraulic Hose Connector
5110-253R	Cylinder Restricter Fitting
5200-258	Debris Deflector
73248	5/16-18 x 1/4 Set Screw (2)
73402	1/2-13 Nylon Lock Nut
73403	1/2 Split Washer (2)
73407	1/2-13 x 1½ Hexhead Bolt (2)
73408	1/2-13 x 1 Hexhead Bolt (2)
73410	1/2-13 x 3½ Hexhead Bolt

5110 PART NUMBERS & DIAGRAMS

CASTER & FOOT PEG PARTS

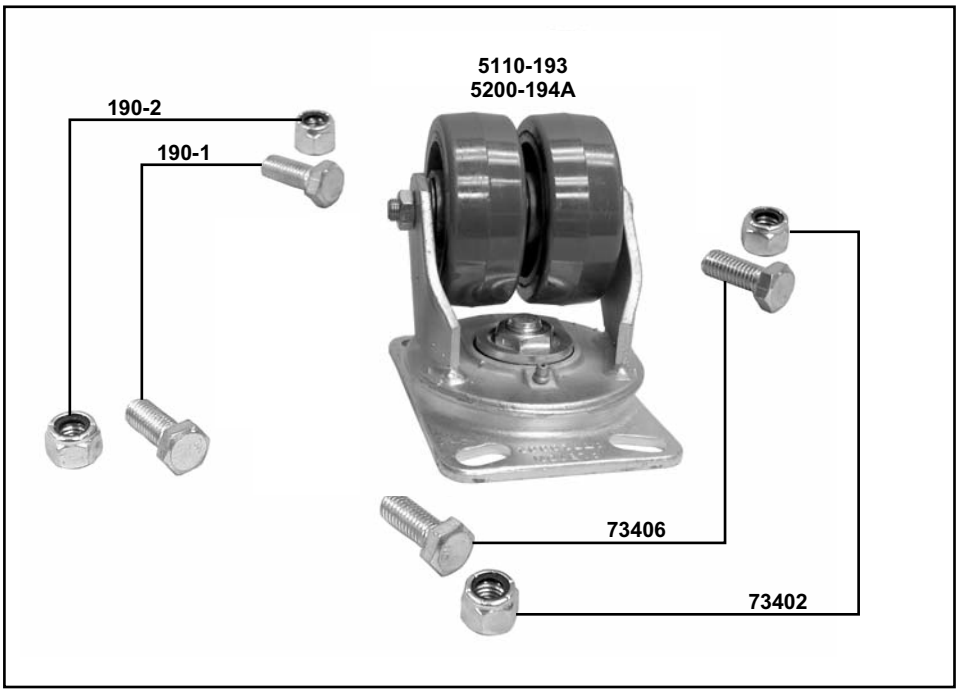

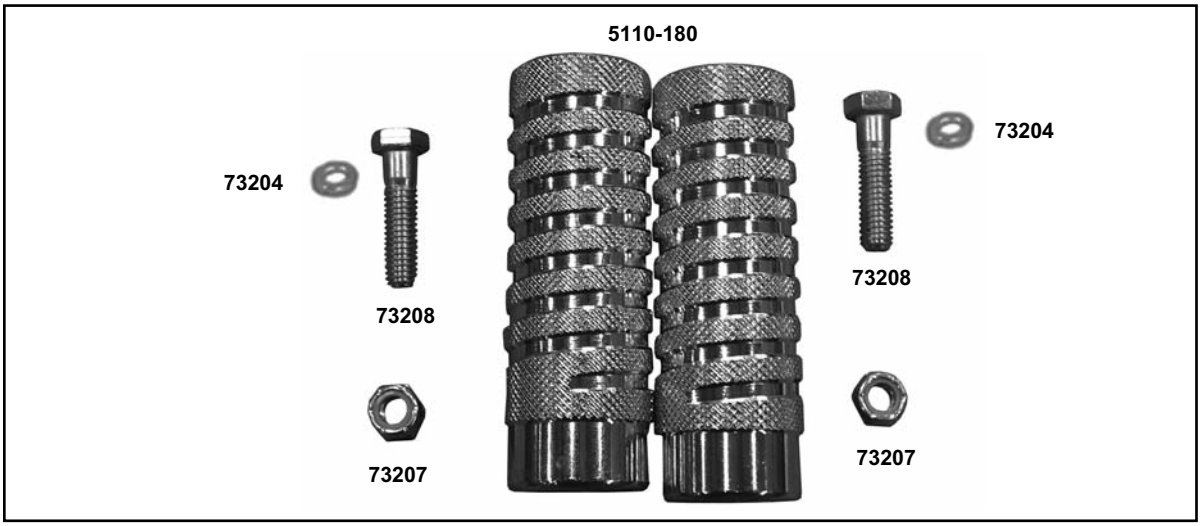

PART #	DESCRIPTION	PART #	DESCRIPTION
5110-180	Foot Peg (2)	73204	3/8 Split Lock Washer (2)
5110-191	Single Wheel Caster Assembly (Not Shown)	73207	3/8-16 Nylon Lock Nut (2)
5110-191A	Replacement Single Wheel Only (Not Shown)	73208	3/8-16 x 1½ Hexhead Cap Screw (2)
5110-193	Double Wheel Caster Assembly (Green)	73402	1/2-13 Nylon Lock Nut (4)
5110-193A	Replacement Wheel Only		

5110 PART NUMBERS & DIAGRAMS

FILTER PARTS

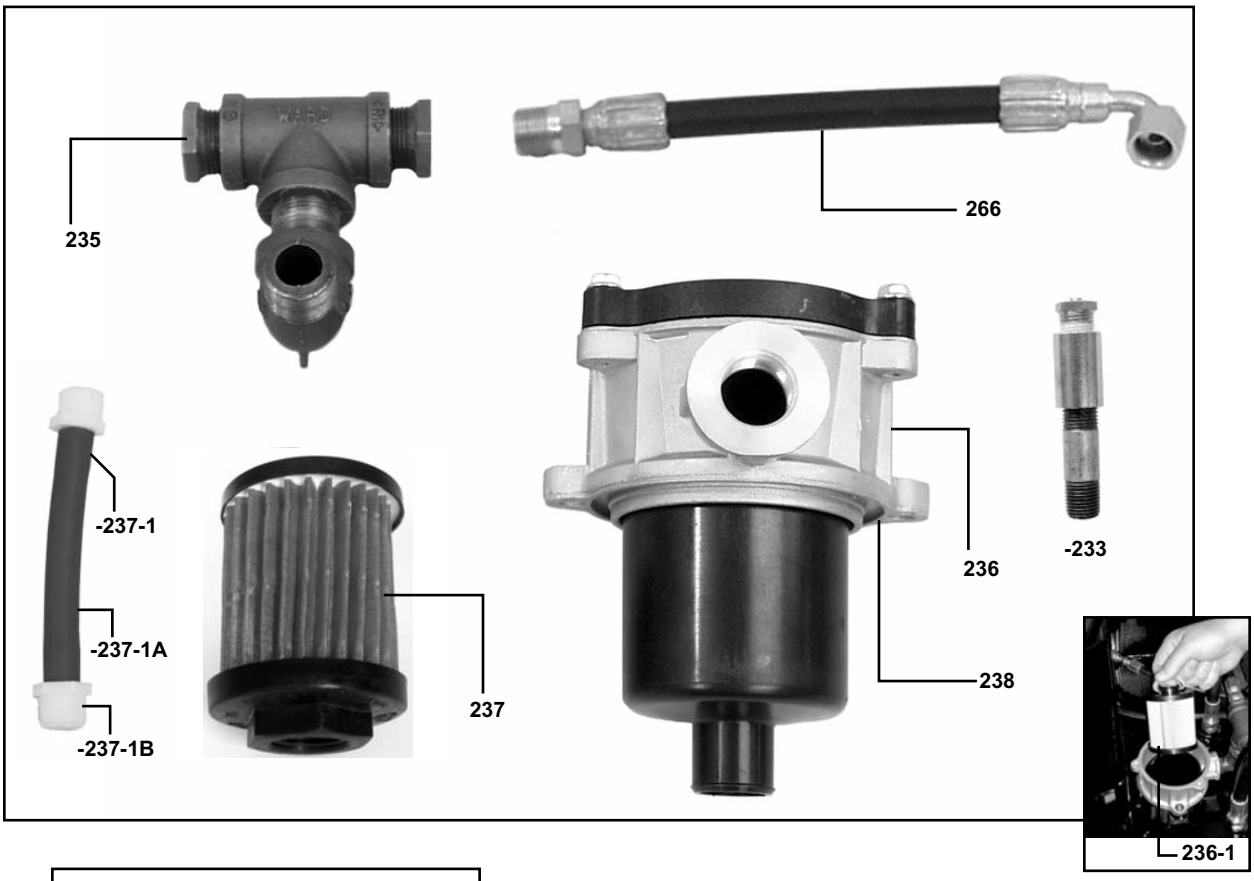

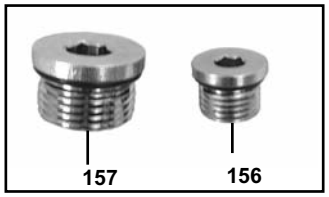

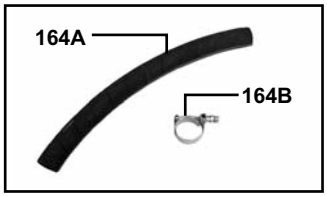

PART #	DESCRIPTION
5110-156	Oil Level Plug (2)
5110-157	Drain/Fill Plug (2)
5110-164A	Tank Hose
5110-164B	Tank Hose Clamp
5110-233	Breather Assembly
5110-235	Filter “T” Fitting Assembly
5110-235-1	Filter Hose Fitting Only (2)
5110-235-2	Filter “T” Only
5110-235-3	Filter Coupler Only
5110-235-4	Filter Elbow Only

PART #	DESCRIPTION
5110-236	Filter Housing Assembly
5110-236-1	Replacement Filter Return
5110-237	Suction Filter Screen (Inside Hydraulic Tank)
5110-237-1	Filter Suction Line Assembly (2)
5110-237-1A	Filter Hose Only (2)
5110-237-1B	Filter Hose Fitting Only (4)
5110-238	Filter O-Ring Seal
5110-266	Return Line (2)

5110 PART NUMBERS & DIAGRAMS

WEIGHTS

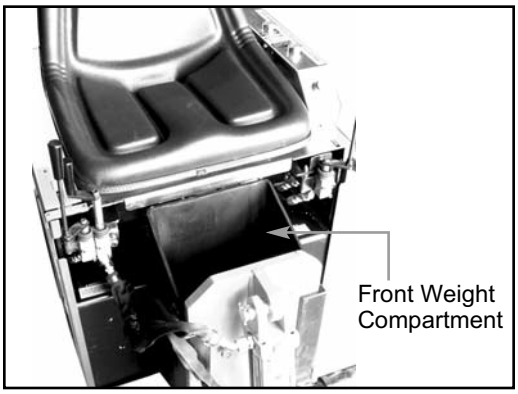

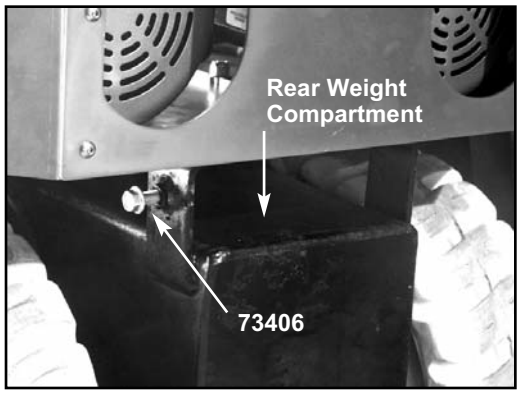

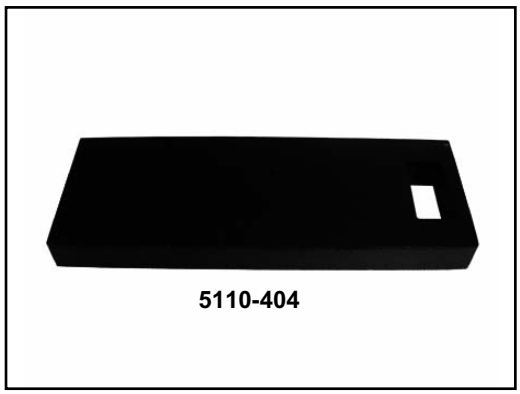

PART#	DESCRIPTION
5110-162A-6	Optional Pocket Weight (Not Shown)
5110-403	Front Weight (set of 9) (Not Shown)
5110-403-2	Front weight individual

PART #	DESCRIPTION
5110-404	Rear Weight
73406	1/2-13 x 1¼ Hexhead Bolt

5110 LABELS

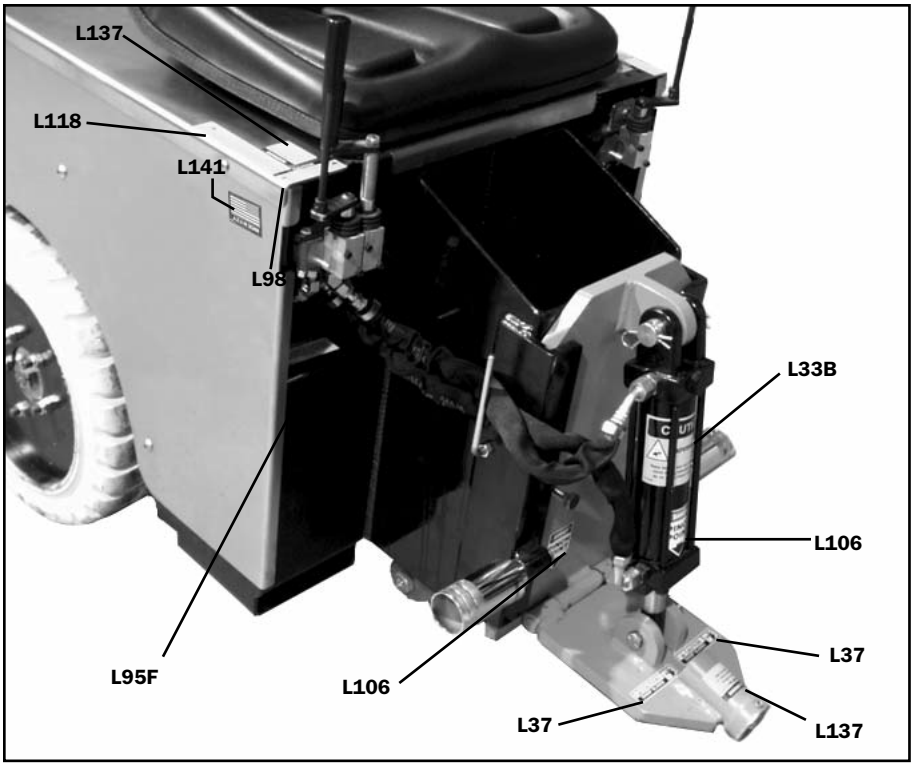

PART #	DESCRIPTION
L33B	Caution Moving Parts Label (2)
L37	Caution Sharp Blades Label (2)
L95F	Fluid Leak Label (2)
L98	Blade Lift Label
L106	Pinch Point Label (3)

PART #	DESCRIPTION
L118	Operator Must Be Seated Label (2)
L137	Disarm Machine Label (3)
L141	Flag - Made In USA Label (2)

5110 LABELS

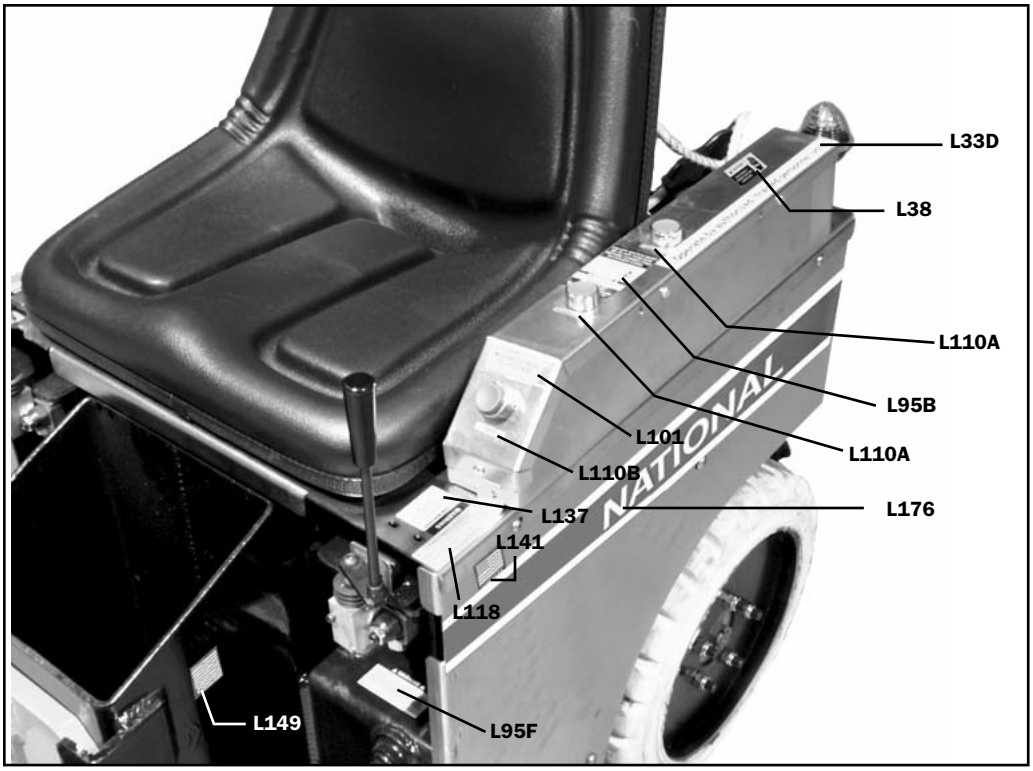

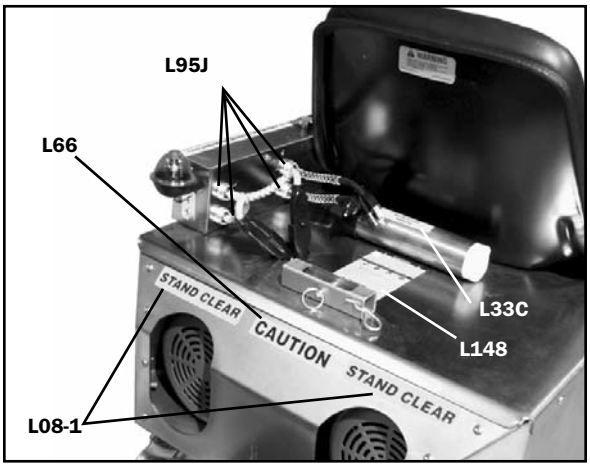

PART #	DESCRIPTION
L08-1	Stand Clear Label (2)
L33C	Instruction Manual Label
L33D	Authorized Personnel Label
L38	Disconnect Before Service Label
L66	Large Caution Label
L95B	On/Off Switch Label
L95F	Fluid Leak Label (2)
L95J	Voltage Label 110V (4)
L101	Kill Switch Label

PART #	DESCRIPTION
L110A	On Label (2)
L110B	Off Label
L118	Operator Must Be Seated Label (2)
L137	Disarm Machine Label (3)
L141	Flag - Made In USA Label (2)
L148	Caution General Info Label
L152	Earth Ground Label (2) (Not Shown)
L176	National Label - Large (2)

5110 ACCESSORIES

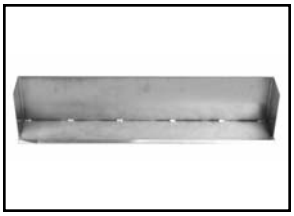

#7074 TILE BOX

The Tile Box works for wind rowing and assists for a fast clean-up and collection of tile debris for quick removal. High abrasion alloy for a long lasting edge. Resharpens just like a blade. 5" x 27" x 6" box. Attaches to the #7050-27 Cutting Head (required).

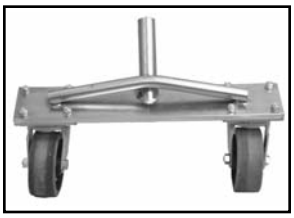

#5110-100 FRONT WHEEL ASSEMBLY

Allows stability and safe transportation over any surface. Easy and quick to attach.

#5110-100W Replacement Wheel Only

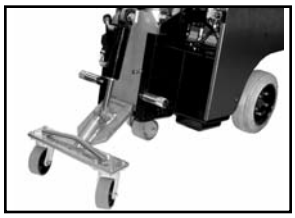

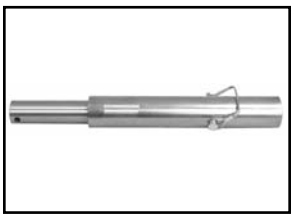

#7050-15 CUTTING HEAD EXTENSION

Extension for cutting heads to reach under tight areas.

#5110-111-3 OPTIONAL ARM RESTS/ SET

Optional Arm Rests for added comfort. Set includes left and right arm rest and mounting hardware.

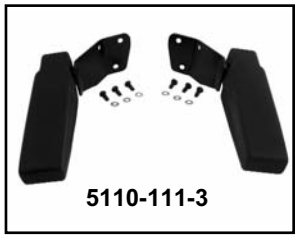

5110 ACCESSORIES

CUTTING HEADS

Swivel heads rotate to use the second sharp edge of the blade without having to remove the blade. Swivel head allows blade to stay in contact with the floor.

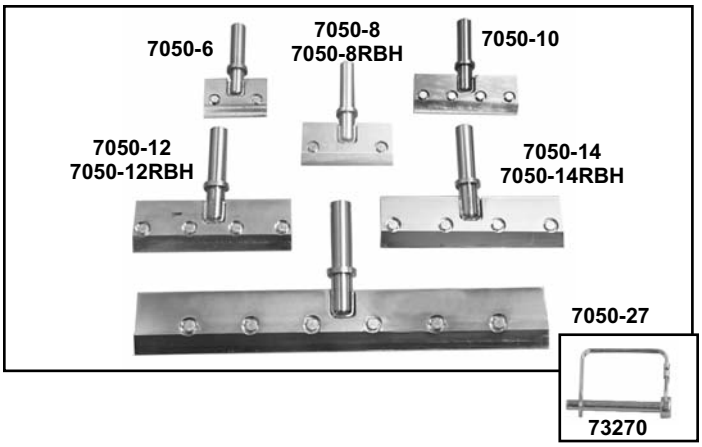

7050-6	CUTTING HEAD 6"
7050-8	CUTTING HEAD 8"
7050-10	CUTTING HEAD 10"
7050-12	CUTTING HEAD 12"
7050-14	CUTTING HEAD 14"
7050-27	CUTTING HEAD 27"
7050-8RBH	RAZOR BLADE HEAD 8"
7050-12RBH	RAZOR BLADE HEAD 12"
7050-14RBH	RAZOR BLADE HEAD 14"
73270	3/8 X 3 PIN Secures cutting head assemblies

WOOD/VCT ANGLE SHANK BLADES

Designed for removing wood and the toughest removals. Blades are mounted at an angle to achieve the optimum shear point for the best performance.

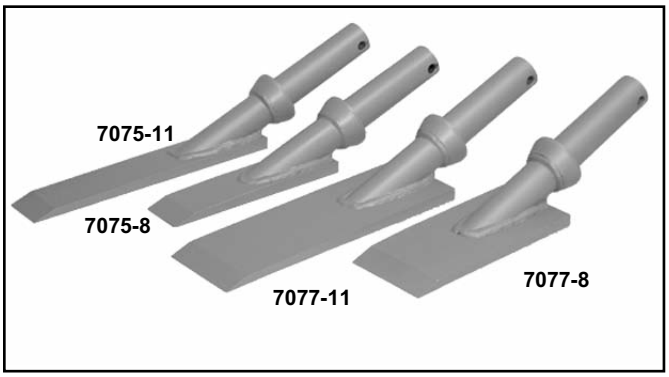

7075-8	2 X 8 CUTTING HEAD
7075-11	2 X 11 CUTTING HEAD
7077-8	3.5 X 8 CUTTING HEAD
7077-11	3.5 X 11 CUTTING HEAD

WOOD ANGLE SHANK BLADES WITH CARBIDE TIPS

Works on wood and ceramic. Blades are mounted at an angle to achieve the optimum shear point for the best performance. Nothing else performs like carbide when no other blade will work.

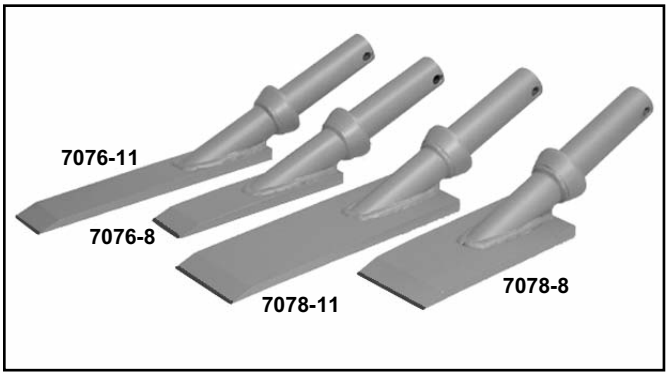

7076-8	2 X 8 CUTTING HEAD
7076-11	2 X 11 CUTTING HEAD
7078-8	3.5 X 8 CUTTING HEAD
7078-11	3.5 X 11 CUTTING HEAD

5110 ACCESSORIES

STRAIGHT SHANK BLADES

The ultimate for tough removals. Works well for ceramic, wood and thick epoxy.

7070-2	**2" STRAIGHT SHANK BLADE**
7070-3	**3" STRAIGHT SHANK BLADE**
7070-4	**4" STRAIGHT SHANK BLADE**
7070-6	**6" STRAIGHT SHANK BLADE**

ANGLE SHANK/SHOE BLADES

The same application as the #7070 blades, but is mounted at an angle to achieve the optimum shear point for optimum performance. Works well for ceramic and thick epoxy.

7071-2	**2" ANGLE SHANK BLADE**
7071-3	**3" ANGLE SHANK BLADE**
7071-4	**4" ANGLE SHANK BLADE**
7071-6	**6" ANGLE SHANK BLADE**

STRAIGHT SHANK WITH CARBIDE TIPS

The same application as the #7070 blades, but are carbide tipped for holding a sharp edge for long periods. Works well for ceramic and thick epoxy.

7072-2	**2" STRAIGHT SHANK WITH CARBIDE TIP BLADE**
7072-3	**3" STRAIGHT SHANK WITH CARBIDE TIP BLADE**
7072-4	**4" STRAIGHT SHANK WITH CARBIDE TIP BLADE**
7072-6	**6" STRAIGHT SHANK WITH CARBIDE TIP BLADE**

EXTRA HEAVY DUTY CERAMIC EPOXY SHANKS WITH CARBIDE TIP

Designed for ceramic removal and thin-set rescraping. 1/2**"** of carbide which is twice the carbide of the #7072 & #7073 series blades. The extra carbide allows for maximum resharpening. Strong enough to work on machines up to 3500 lbs.

7079-2	**2" EXTRA HD CERAMIC EPOXY SHANK WITH CARBIDE TIP**
7079-4	**4" EXTRA HD CERAMIC EPOXY SHANK WITH CARBIDE TIP**
7079-6	**6" EXTRA HD CERAMIC EPOXY SHANK WITH CARBIDE TIP**

Material Safety Data Sheet

SECTION 1 PRODUCT AND COMPANY IDENTIFICATION

Texaco Rando® HD 22 - 68

Product Number(s): CPS221655, CPS221657, CPS221658, CPS221659
Synonyms: Texaco Rando® HD 22, Texaco Rando® HD 32, Texaco Rando® HD 46, Texaco Rando® HD 68
Company Identification
Chevron Products Company
a division of Chevron U.S.A. Inc.
6001 Bollinger Canyon Road
San Ramon, CA 94583
United States of America
www.chevronlubricants.com

Transportation Emergency Response
CHEMTREC: (800) 424-9300 or (703) 527-3887
Health Emergency
Chevron Emergency Information Center: Located in the USA. International collect calls accepted. (800) 231-0623 or (510) 231-0623
Product Information
email : lubemsds@chevron.com
Product Information: 800-LUBE-TEK
MSDS Requests: 800-414-6737

SECTION 2 COMPOSITION/ INFORMATION ON INGREDIENTS

COMPONENTS	CAS NUMBER	AMOUNT
Highly refined mineral oil (C15 - C50)	Mixture	90 - 100 %weight

SECTION 3 HAZARDS IDENTIFICATION

IMMEDIATE HEALTH EFFECTS
Eye: Not expected to cause prolonged or significant eye irritation.
Skin: Contact with the skin is not expected to cause prolonged or significant irritation. Not expected to be harmful to internal organs if absorbed through the skin. High-Pressure Equipment Information: Accidental high-velocity injection under the skin of materials of this type may result in serious injury. Seek medical attention at once should an accident like this occur. The initial wound at the injection site may not appear to be serious at first; but, if left untreated, could result in disfigurement or amputation of the affected part.

Ingestion: Not expected to be harmful if swallowed.
Inhalation: Not expected to be harmful if inhaled. Contains a petroleum-based mineral oil. May cause respiratory irritation or other pulmonary effects following prolonged or repeated inhalation of oil mist at airborne levels above the recommended mineral oil mist exposure limit. Symptoms of respiratory irritation may include coughing and difficulty breathing.

SECTION 4 FIRST AID MEASURES

Eye: No specific first aid measures are required. As a precaution, remove contact lenses, if worn, and flush eyes with water.

Skin: No specific first aid measures are required. As a precaution, remove clothing and shoes if contaminated. To remove the material from skin, use soap and water. Discard contaminated clothing and shoes or thoroughly clean before reuse.
Ingestion: No specific first aid measures are required. Do not induce vomiting. As a precaution, get medical advice.
Inhalation: No specific first aid measures are required. If exposed to excessive levels of material in the air, move the exposed person to fresh air. Get medical attention if coughing or respiratory discomfort occurs.
Note to Physicians: In an accident involving high-pressure equipment, this product may be injected under the skin. Such an accident may result in a small, sometimes bloodless, puncture wound. However, because of its driving force, material injected into a fingertip can be deposited into the palm of the hand. Within 24 hours, there is usually a great deal of swelling, discoloration, and intense throbbing pain. Immediate treatment at a surgical emergency center is recommended.

SECTION 5 FIRE FIGHTING MEASURES

Leaks/ruptures in high pressure system using materials of this type can create a fire hazard when in the vicinity of ignition sources (eg. open flame, pilot lights, sparks, or electric arcs).

FIRE CLASSIFICATION:
OSHA Classification (29 CFR 1910.1200): Not classified by OSHA as flammable or combustible.

NFPA RATINGS: Health: 0 Flammability: 1 Reactivity: 0

FLAMMABLE PROPERTIES:
Flashpoint: (Cleveland Open Cup) 150 °C (302 °F) (Min)
Autoignition: No Data Available
Flammability (Explosive) Limits (% by volume in air): Lower: Not Applicable Upper: Not Applicable

EXTINGUISHING MEDIA: Use water fog, foam, dry chemical or carbon dioxide (CO_2) to extinguish flames.
PROTECTION OF FIRE FIGHTERS:
Fire Fighting Instructions: This material will burn although it is not easily ignited. For fires involving this material, do not enter any enclosed or confined fire space without proper protective equipment, including self-contained breathing apparatus.
Combustion Products: Highly dependent on combustion conditions. A complex mixture of airborne solids, liquids, and gases including carbon monoxide, carbon dioxide, and unidentified organic compounds will be evolved when this material undergoes combustion.

SECTION 6 ACCIDENTAL RELEASE MEASURES

Protective Measures: Eliminate all sources of ignition in vicinity of spilled material.
Spill Management: Stop the source of the release if you can do it without risk. Contain release to prevent further contamination of soil, surface water or groundwater. Clean up spill as soon as possible, observing precautions in Exposure Controls/Personal Protection. Use appropriate techniques such as applying non-combustible absorbent materials or pumping. Where feasible and appropriate, remove contaminated soil. Place contaminated materials in disposable containers and dispose of in a manner consistent with applicable regulations.
Reporting: Report spills to local authorities and/or the U.S. Coast Guard's National Response Center at (800) 424-8802 as appropriate or required.

SECTION 7 HANDLING AND STORAGE

Precautionary Measures: DO NOT USE IN HIGH PRESSURE SYSTEMS in the vicinity of flames, sparks and hot surfaces. Use only in well ventilated areas. Keep container closed.

General Handling Information: Avoid contaminating soil or releasing this material into sewage and drainage systems and bodies of water.
Static Hazard: Electrostatic charge may accumulate and create a hazardous condition when handling this material. To minimize this hazard, bonding and grounding may be necessary but may not, by themselves, be sufficient. Review all operations which have the potential of generating and accumulating an electrostatic charge and/or a flammable atmosphere (including tank and container filling, splash filling, tank cleaning, sampling, gauging, switch loading, filtering, mixing, agitation, and vacuum truck operations) and use appropriate mitigating procedures. For more information, refer to OSHA Standard 29 CFR 1910.106, 'Flammable and Combustible

Liquids', National Fire Protection Association (NFPA 77, 'Recommended Practice on Static Electricity', and/or the American Petroleum Institute (API) Recommended Practice 2003, 'Protection Against Ignitions Arising Out of Static, Lightning, and Stray Currents'.
Container Warnings: Container is not designed to contain pressure. Do not use pressure to empty container or it may rupture with explosive force. Empty containers retain product residue (solid, liquid, and/or vapor) and can be dangerous. Do not pressurize, cut, weld, braze, solder, drill, grind, or expose such containers to heat, flame, sparks, static electricity, or other sources of ignition. They may explode and cause injury or death. Empty containers should be completely drained, properly closed, and promptly returned to a drum reconditioner or disposed of properly.

SECTION 8 EXPOSURE CONTROLS/PERSONAL PROTECTION

GENERAL CONSIDERATIONS:
Consider the potential hazards of this material (see Section 3), applicable exposure limits, job activities, and other substances in the work place when designing engineering controls and selecting personal protective equipment. If engineering controls or work practices are not adequate to prevent exposure to harmful levels of this material, the personal protective equipment listed below is recommended. The user should read and understand all instructions and limitations supplied with the equipment since protection is usually provided for a limited time or under certain circumstances.

ENGINEERING CONTROLS:
Use in a well-ventilated area.

PERSONAL PROTECTIVE EQUIPMENT
Eye/Face Protection: No special eye protection is normally required. Where splashing is possible, wear safety glasses with side shields as a good safety practice.
Skin Protection: No special protective clothing is normally required. Where splashing is possible, select protective clothing depending on operations conducted, physical requirements and other substances in the workplace. Suggested materials for protective gloves include: 4H (PE/EVAL), Nitrile Rubber, Silver Shield, Viton.
Respiratory Protection: No respiratory protection is normally required.
If user operations generate an oil mist, determine if airborne concentrations are below the occupational exposure limit for mineral oil mist. If not, wear an approved respirator that provides adequate protection from the measured concentrations of this material. For air-purifying respirators use a particulate cartridge.
Use a positive pressure air-supplying respirator in circumstances where air-purifying respirators may not provide adequate protection.

SECTION 9 PHYSICAL AND CHEMICAL PROPERTIES

Attention: the data below are typical values and do not constitute a specification.

Color: Yellow
Physical State: Liquid
Odor: Petroleum odor
pH: Not Applicable
Vapor Pressure: <0.01 mmHg @ 37.8 °C (100 °F)
Vapor Density (Air = 1): >1
Boiling Point: >315.6°C (600°F)
Solubility: Soluble in hydrocarbons; insoluble in water
Freezing Point: Not Applicable
Melting Point: Not Applicable
Specific Gravity: 0.86 - 0.87 @ 15.6°C (60.1°F) / 15.6°C (60.1°F)
Density: 0.86 kg/l - 0.9 kg/l @ 15°C (59°F)
Viscosity: 22 cSt - 61.2 cSt @ 40°C (104°F) (Min)

SECTION 10 STABILITY AND REACTIVITY

Chemical Stability: This material is considered stable under normal ambient and anticipated storage and handling conditions of temperature and pressure.
Incompatibility With Other Materials: May react with strong acids or strong oxidizing agents, such as chlorates, nitrates, peroxides, etc.
Hazardous Decomposition Products: None known (None expected)

Hazardous Polymerization: Hazardous polymerization will not occur.

SECTION 11 TOXICOLOGICAL INFORMATION

IMMEDIATE HEALTH EFFECTS
Eye Irritation: The eye irritation hazard is based on evaluation of data for similar materials or product components.
Skin Irritation: The skin irritation hazard is based on evaluation of data for similar materials or product components.
Skin Sensitization: No product toxicology data available.
Acute Dermal Toxicity: The acute dermal toxicity hazard is based on evaluation of data for similar materials or product components.
Acute Oral Toxicity: The acute oral toxicity hazard is based on evaluation of data for similar materials or product components.
Acute Inhalation Toxicity: The acute inhalation toxicity hazard is based on evaluation of data for similar materials or product components.

ADDITIONAL TOXICOLOGY INFORMATION:
This product contains petroleum base oils which may be refined by various processes including severe solvent extraction, severe hydrocracking, or severe hydrotreating. None of the oils requires a cancer warning under the OSHA Hazard Communication Standard (29 CFR 1910.1200). These oils have not been listed in the National Toxicology Program (NTP) Annual Report nor have they been classified by the International Agency for Research on Cancer (IARC) as; carcinogenic to humans (Group 1), probably carcinogenic to humans (Group 2A), or possibly carcinogenic to humans (Group 2B). These oils have not been classified by the American Conference of Governmental Industrial Hygienists (ACGIH) as: confirmed human carcinogen (A1), suspected human carcinogen (A2), or confirmed animal carcinogen with unknown relevance to humans (A3).

SECTION 12 ECOLOGICAL INFORMATION

ECOTOXICITY
This material is not expected to be harmful to aquatic organisms. The ecotoxicity hazard is based on an evaluation of data for the components or a similar material.

ENVIRONMENTAL FATE
This material is not expected to be readily biodegradable.

SECTION 13 DISPOSAL CONSIDERATIONS

Use material for its intended purpose or recycle if possible. Oil collection services are available for used oil recycling or disposal. Place contaminated materials in containers and dispose of in a manner consistent with applicable regulations. Contact your sales representative or local environmental or health authorities for approved disposal or recycling methods.

SECTION 14 TRANSPORT INFORMATION

The description shown may not apply to all shipping situations. Consult 49CFR, or appropriate Dangerous Goods Regulations, for additional description requirements (e.g., technical name) and mode-specific or quantity-specific shipping requirements.
DOT Shipping Description: PETROLEUM LUBRICATING OIL, NOT REGULATED AS A HAZARDOUS MATERIAL FOR TRANSPORTATION UNDER 49 CFR
Additional Information:NOT HAZARDOUS BY U.S. DOT. ADR/RID HAZARD CLASS NOT APPLICABLE.

IMO/IMDG Shipping Description: PETROLEUM LUBRICATING OIL; NOT REGULATED AS DANGEROUS GOODS FOR TRANSPORT UNDER THE IMDG CODE

ICAO/IATA Shipping Description: PETROLEUM LUBRICATING OIL; NOT REGULATED AS DANGEROUS GOODS FOR TRANSPORT UNDER ICAO

SECTION 15 REGULATORY INFORMATION

EPCRA 311/312 CATEGORIES: 1. Immediate (Acute) Health Effects: NO
2. Delayed (Chronic) Health Effects: NO
3. Fire Hazard: NO
4. Sudden Release of Pressure Hazard: NO
5. Reactivity Hazard: NO

REGULATORY LISTS SEARCHED:

01-1=IARC Group 1	03=EPCRA 313
01-2A=IARC Group 2A	04=CA Proposition 65
01-2B=IARC Group 2B	05=MA RTK
02=NTP Carcinogen0	6=NJ RTK
	07=PA RTK

No components of this material were found on the regulatory lists above.

CHEMICAL INVENTORIES:
All components comply with the following chemical inventory requirements: AICS (Australia), DSL (Canada), ENCS (Japan), IECSC (China), KECI (Korea), PICCS (Philippines), TSCA (United States).

One or more components is listed on ELINCS (European Union). Secondary notification by the importer may be required.

NEW JERSEY RTK CLASSIFICATION:
Under the New Jersey Right-to-Know Act L. 1983 Chapter 315 N.J.S.A. 34:5A-1 et. seq., the product is to be identified as follows: PETROLEUM OIL (Hydraulic oil)

WHMIS CLASSIFICATION:
This product is not considered a controlled product according to the criteria of the Canadian Controlled Products Regulations.

SECTION 16 OTHER INFORMATION

NFPA RATINGS: Health: 0 Flammability: 1 Reactivity: 0

HMIS RATINGS: Health: 1 Flammability: 1 Reactivity: 0
(0-Least, 1-Slight, 2-Moderate, 3-High, 4-Extreme, PPE:- Personal Protection Equipment Index recommendation, *- Chronic Effect Indicator). These values are obtained using the guidelines or published evaluations prepared by the National Fire Protection Association (NFPA) or the National Paint and Coating Association (for HMIS ratings).

LABEL RECOMMENDATION:
Label Category : INDUSTRIAL OIL 1 - IND1

REVISION STATEMENT: This revision updates the following sections of this Material Safety Data Sheet: 2.
Revision Date: January 15, 2007

ABBREVIATIONS THAT MAY HAVE BEEN USED IN THIS DOCUMENT:

TLV - Threshold Limit Value	TWA - Time Weighted Average
STEL - Short-term Exposure Limit	PEL - Permissible Exposure Limit
	CAS - Chemical Abstract Service Number
ACGIH - American Conference of Government Industrial Hygienists	IMO/IMDG - International Maritime Dangerous Goods Code
API - American Petroleum Institute	MSDS - Material Safety Data Sheet

CVX - Chevron	NFPA - National Fire Protection Association (USA)
DOT - Department of Transportation (USA)	NTP - National Toxicology Program (USA)
IARC - International Agency for Research on Cancer	OSHA - Occupational Safety and Health Administration

Prepared according to the OSHA Hazard Communication Standard (29 CFR 1910.1200) and the ANSI MSDS Standard (Z400.1) by the Chevron Energy Technology Company, 100 Chevron Way, Richmond, California 94802.

The above information is based on the data of which we are aware and is believed to be correct as of the date hereof. Since this information may be applied under conditions beyond our control and with which we may be unfamiliar and since data made available subsequent to the date hereof may suggest modifications of the information, we do not assume any responsibility for the results of its use. This information is furnished upon condition that the person receiving it shall make his own determination of the suitability of the material for his particular purpose.

5110 GUARANTEE

National Flooring Equipment, Inc. (National) warrants to the first consumer/purchaser that this National brand product (the #5110 Panther® Ride-On), when shipped in its original container, will be free from defective workmanship and materials and agrees that it will, at its option, either repair the defect or replace the defective product or part thereof at no charge to the purchaser for parts or labor for the period(s) set forth below.

This warranty does not apply to any appearance items of the product, to the additional excluded items set forth below, or to any product, the exterior of which has been damaged or defaced, which has been subjected to misuse, abnormal service or handling, or which has been altered or modified in design or construction.

In order to enforce the rights under this limited warranty, the purchaser should follow the steps set forth below and provide proof of purchase to National.

The limited warranty described herein is in addition to whatever implied warranties may be granted to purchasers by law. ALL IMPLIED WARRANTIES INCLUDING THE WARRANTIES OF MERCHANTABILITY AND FITNESS FOR USE ARE LIMITED TO THE PERIODS FROM THE DATE OF PURCHASE AS SET FORTH BELOW. Some states do not allow time limitations on an implied warranty, so the above limitation may not apply to you.

Neither the sales person of the seller, nor any other person, is authorized to make any other warranties other than those described herein, or to extend the duration of any warranties beyond the time period described herein on behalf of National.

The warranties described herein shall be the sole and exclusive warranties granted by National and shall be the sole and exclusive remedy available to the purchaser. Correction of defects in the manner and for the period of time described herein, shall constitute complete fulfillment of all liabilities and responsibilities of National to the purchaser with respect to the product and shall constitute full satisfaction of all claims, whether based on contract, negligence, strict liability or otherwise. In no event shall National be liable, or in any way responsible for any damage or defects in the product which were caused by repairs or attempted repairs performed by anyone other than National. Nor shall National be liable, or in any way responsible, for any incidental or consequential, economics or property damage. Some states do not allow the exclusion of incidental or consequential damages, so the above exclusion may not apply to you.

THIS WARRANTY GIVES YOU SPECIFIC LEGAL RIGHTS. YOU MAY ALSO HAVE OTHER RIGHTS WHICH VARY FROM STATE TO STATE.

WARRANTY PERIOD

The #5110 Panther® Ride-On is guaranteed to be free of manufacturer defective workmanship and in quality of materials for a period of one year.

Items excluded from warranty coverage, unless found and reported defective immediately upon removal from the original shipping container and before being used by the original purchaser.

A freight damage claim must be filed with the carrier by the purchaser, the shipper cannot file the freight claim.

To obtain service contact National Flooring Equipment, Inc. toll free at 800-245-0267 for a repair authorization number. COD freight returns will not be accepted. Freight collect shipments will not be accepted. Warranty repairs must be accompanied by date of purchase receipt and a return/repair authorization number.

RETURN SHEET

Company Name _____

Contact Name _____

Telephone Number _____

Approximate Usage (hours) _____

Problems Encountered _____

_____

_____

_____

_____

Check One: ❑ Repair

Do you wish to be contacted before repairing ❑ Yes ❑ No

❑ Return

Contact National if a loaner is needed

Return Authorization Number _____ Date _____

required, contact National

Customer Number _____

if known

Purchased From _____

if not directly from National

INTERNAL USE ONLY

Date Received _____

Unit Serial Number _____

Subject To Warranty _____

5110 BLADE ORDER FORM

Part #	Description	Thickness	Quantity
#135	5" x 16" Blade	.062	
#147	4" x 6" Blade	.062	
#148	5" x 6" Blade	.062	
#363-2	3/4" x 8" Razor/Scraper Blade (50/pkg)	.032	
#368-8	7/8" x 8" Razor/Scraper Blade (50/pkg)	.045	
#368-12	7/8" x 12" Razor/Scraper Blade (50/pkg)	.045	
#368-15	7/8" x 15" Razor/Scraper Blade (50/pkg)	.045	
#6258-BU	3" x 12" Self Scoring Blade - Bevel Up	.062	
#6259-BU	3" x 14" Self Scoring Blade - Bevel Up	.062	
#6260-BD	3" x 6" Heavy Duty Ditching	.094	
#6281	3" x 8" Heavy Duty Blade	.094	
#6282	3" x 14" Heavy Duty Blade	.094	
#6283	3" x 27" Heavy Duty Blade	.094	
#6284	3" x 12" Heavy Duty Blade	.094	
#6285	3" x 6" Heavy Duty Blade	.094	
#6286	3" x 10" Heavy Duty Blade	.094	
#6290	3" x 6" Extra Heavy Duty Blade	.187	
#6291	3" x 8" Extra Heavy Duty Blade	.187	
#6292	3" x 12" Extra Heavy Duty Blade	.187	
#6293	3" x 14" Extra Heavy Duty Blade	.187	
#6294	3" x 27" Extra Heavy Duty Blade	.187	
#7050-200	3" x 6" Premium High Tempered Blade	.062	
#7050-201	3" x 8" Premium High Tempered Blade	.062	
#7050-202	3" x 10" Premium High Tempered Blade	.062	
#7050-203	3" x 12" Premium High Tempered Blade	.062	
#7050-204	3" x 14" Premium High Tempered Blade	.062	
#7050-205	3" x 27" Premium High Tempered Blade	.062	
#7070-2	4" x 2" Straight Shank Blades	.500	
#7070-3	4" x 3" Straight Shank Blades	.500	
#7070-4	4" x 4" Straight Shank Blades	.500	
#7070-6	4" x 6" Straight Shank Blades	.500	
#7071-2	4" x 2" Angle Shank Blades	.500	
#7071-3	4" x 3" Angle Shank Blades	.500	
#7071-4	4" x 4" Angle Shank Blades	.500	
#7071-6	4" x 6" Angle Shank Blades	.500	
#7072-2	4" x 2" Straight Shank w/Carbide Tip	.500	
#7072-3	4" x 3" Straight Shank w/Carbide Tip	.500	
#7072-4	4" x 4" Straight Shank w/Carbide Tip	.500	
#7072-6	4" x 6"Straight Shank w/Carbide Tip	.500	
#7075-8	2" x 8" Tapered Cutting Head Shank	.300	
#7075-11	2" x 11" Tapered Cutting Head Shank	.300	

5110 BLADE ORDER FORM

Part #	Description	Thickness	Quantity
#7077-8	3.5" x 8" Tapered Cutting Head Shank	.300	
#7077-11	3.5" x 11" Tapered Cutting Head Shank	.300	
#7076-8	2" x 8" Tapered w/Carbide Tip	.300	
#7076-11	2" x 11" Tapered w/Carbide Tip	.300	
#7078-8	3.5" x 8" Tapered w/Carbide Tip	.300	
#7078-11	3.5" x 11" Tapered w/Carbide Tip	.300	
#7079-2	2" x 6" Ultra HD Ceramic Epoxy Blade	.500	
#7079-4	4" x 6" Ultra HD Ceramic Epoxy Blade	.500	
#7079-6	6" x 6" Ultra HD Ceramic Epoxy Blade	.500	
#7074	5" x 27" Tile Box with 6" High Box	.187	
#7081	10" Shoe Blade	.062	
#7083	8" Shoe Blade	.062	

BILL TO:
Attn:_____
Company:_____
Address:_____
_____
_____
Phone:_____

SHIP TO:
Attn:_____
Company:_____
Address:_____
_____
_____
Phone:_____

TO ORDER:
Phone: 800-245-0267 or 763-535-8206
Fax: 800-648-7124 or 763-535-8255
Online:www.nationalequipment.com

All orders and payment terms to be verified prior to shipping.

National Flooring Equipment, Inc. • 9250 Xylon Avenue North • Minneapolis, MN 55445
Phone 800-245-0267 or 763-535-8206 • Fax 800-648-7124 or 763-535-8255
Web Site: www.nationalequipment.com • E-Mail: info@nationalequipment.com